HITACHI

LIST NO. F865

ELECTRIC TOOL PARTS LIST

■ CORDLESS IMPACT WRENCH 2001・10・25

Model WR 9DM (E1)

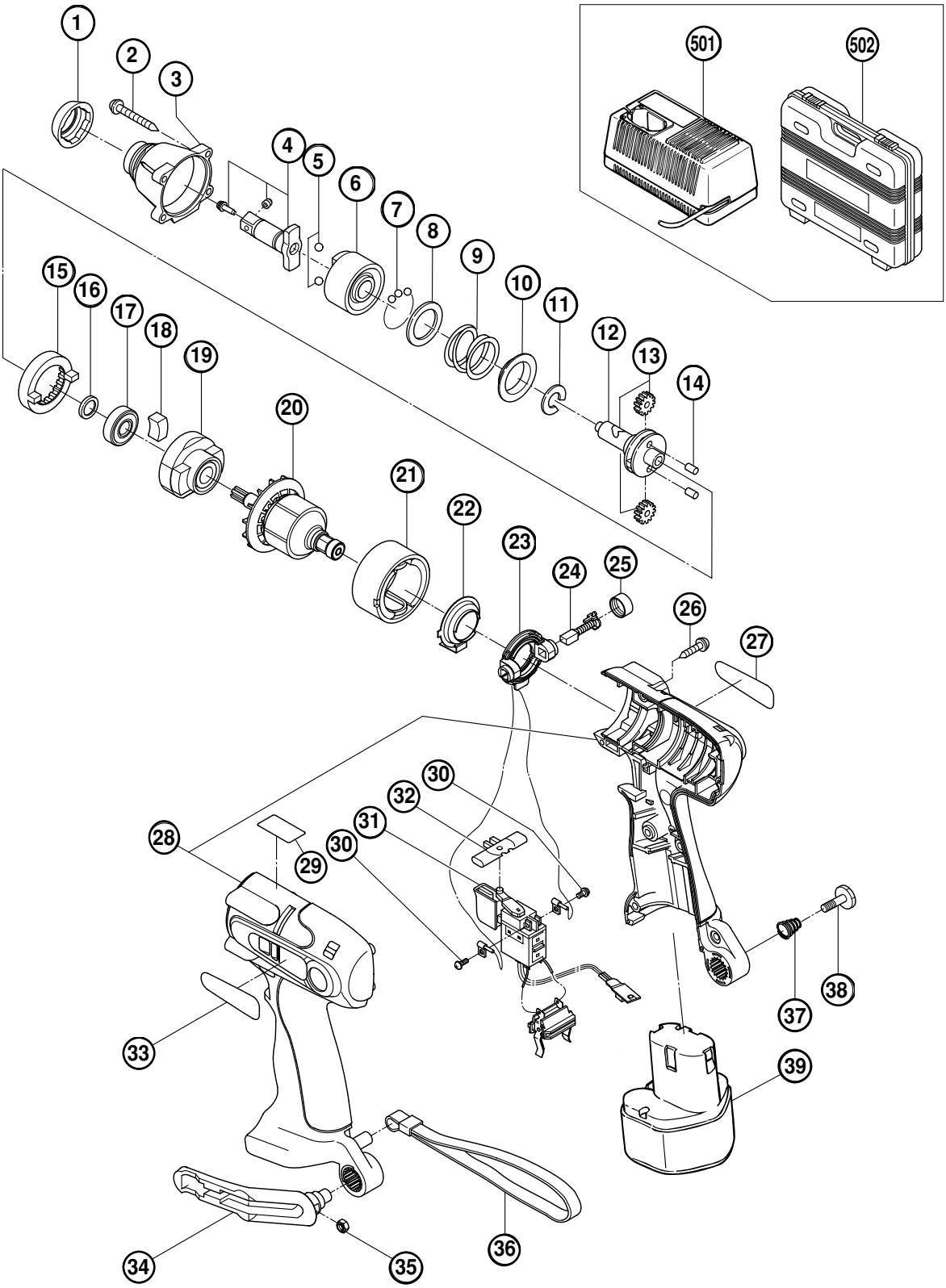

	ITEM NO.	CODE NO.	DESCRIPTION	NO. USED	REMARKS	
	1	320-383	FRONT CAP	1		
	2	319-917	TAPPING SCREW (W/SP. WASHER) D4X25 (BLACK)	4		
	3	320-413	HAMMER CASE	1		
	4	320-414	ANVIL (M)	1		
	5	959-154	STEEL BALL D5.556 (10 PCS.)	2		
	6	320-416	HAMMER (A)	1		
	7	959-148	STEEL BALL D3.175 (10 PCS.)	28		
	8	315-978	WASHER (J)	1		
	9	320-415	HAMMER SPRING (B)	1		
	10	316-172	WASHER (S)	1		
	11	316-171	STOPPER	1		
	12	319-912	SPINDLE	1		
	13	319-913	IDLE GEAR SET (2 PCS.)	2		
	14	319-914	NEEDLE ROLLER	2		
	15	319-910	RING GEAR	1		
	16	319-911	WASHER (E)	1		
	17	690-1VV	BALL BEARING 6901VVCMPS2L	1		
	18	319-909	DAMPER	2		
	19	319-908	INNER COVER	1		
	20	360-564	ARMATURE ASS'Y (W/BALL BEARING) DC 9.6V	1		
	21	319-919	MAGNET	1		
	22	319-907	DUST GUARD FIN	1		
	23	320-376	BRUSH BLOCK	1		
	24	999-054	CARBON BRUSH 5X6X11.5 (1 PAIR)	2		
	25	319-918	BRUSH CAP	2		
	26	302-086	TAPPING SCREW (W/FLANGE) D4X20 (BLACK)	7		
	27		NAME PLATE	1		
	28	320-412	HOUSING (A).(B) SET	1		
*	29		CAUTION PLATE	1	FOR USA	
	30	994-532	MACHINE SCREW (W/SP. WASHER) M3X5	2		
	31	319-906	DC-SPEED CONTROL SWITCH	1		
	32	316-166	PUSHING BUTTON	1		
	33		HITACHI LABEL	1		
	34	320-378	HOOK ASS'Y	1	INCLUD.35	
	35	320-288	V-LOCK NUT M5	1		
	36	306-952	STRAP (BLACK)	1		
	37	319-926	HOOK SPRING	1		
	38	319-927	SPECIAL SCREW M5	1		
*	39	310-377	BATTERY EB 9B (W/ENGLISH N.P.)	1		
*	39	310-451	BATTERY EB 9B (W/ENGLISH N.P.)	1	FOR USA	
*	39	318-368	BATTERY EB 930H (W/ENGLISH N.P.)	1	FOR NOR,SWE,DEN	

* ALTERNATIVE PARTS

STANDARD ACCESSORIES

ITEM NO.	CODE NO.	DESCRIPTION	NO. USED	REMARKS	
501		CHARGER (MODEL UC 14YF2)	1		
502	320-377	CASE	1		

OPTIONAL ACCESSORIES

ITEM NO.	CODE NO.	DESCRIPTION	NO. USED	REMARKS	
601	996-125	HEX. SOCKET ASS'Y 8MMX33L	1	INCLUD.602,603	
602	996-124	SOCKET PIN (A)	1		
603	873-095	O-RING (P-16)	1		
604	996-126	HEX. SOCKET ASS'Y 10MMX33L	1	INCLUD.602,603	
605	996-127	HEX. SOCKET ASS'Y 12MMX33L	1	INCLUD.602,603	
606	996-128	HEX. SOCKET ASS'Y 13MMX33L	1	INCLUD.607,608	
607	996-123	SOCKET PIN (B)	1		
608	873-570	O-RING (P-18)	1		
609	996-129	HEX. SOCKET ASS'Y 14MMX33L	1	INCLUD.607,608	
610	996-130	HEX. SOCKET ASS'Y 16MMX33L	1	INCLUD.607,608	
611	996-131	HEX. SOCKET ASS'Y 17MMX33L	1	INCLUD.607,608	
612	996-132	HEX. SOCKET ASS'Y 18MMX33L	1	INCLUD.607,608	
613	996-133	HEX. SOCKET ASS'Y 19MMX33L	1	INCLUD.607,608	
614	996-134	HEX. SOCKET ASS'Y (LONG) 8MMX60L	1	INCLUD.602,603	
615	996-135	HEX. SOCKET ASS'Y (LONG) 10MMX60L	1	INCLUD.602,603	
616	996-136	HEX. SOCKET ASS'Y (LONG) 12MMX60L	1	INCLUD.602,603	
617	996-137	HEX. SOCKET ASS'Y (LONG) 13MMX60L	1	INCLUD.607,608	
618	996-138	HEX. SOCKET ASS'Y (LONG) 14MMX60L	1	INCLUD.607,608	
619	996-139	HEX. SOCKET ASS'Y (LONG) 16MMX60L	1	INCLUD.607,608	
620	996-140	HEX. SOCKET ASS'Y (LONG) 17MMX60L	1	INCLUD.607,608	
621	996-141	HEX. SOCKET ASS'Y (LONG) 18MMX60L	1	INCLUD.607,608	
622	996-142	HEX. SOCKET ASS'Y (LONG) 19MMX60L	1	INCLUD.607,608	
623	996-143	EXTENSION BAR ASS'Y	1	INCLUD.602,603	
624	996-144	BIT ADAPTER ASS'Y	1	INCLUD.602,603	
625	996-145	ADAPTER ASS'Y 12.7MM	1	INCLUD.607,608	
626	996-147	UNIVERSAL JOINT ASS'Y	1	INCLUD.607,608,627	
627	996-163	UNIVERSAL JOINT PIN	1		
628	309-922	GREASE FOR IMPACT DRIVER (500G)	1		

* ALTERNATIVE PARTS