Hitachi Power Tools

LIST NO. K885

ELECTRIC TOOL PARTS LIST

■ CORDLESS IMPACT WRENCH

2018· 2 ·28

Model WR 36DA

(E1)

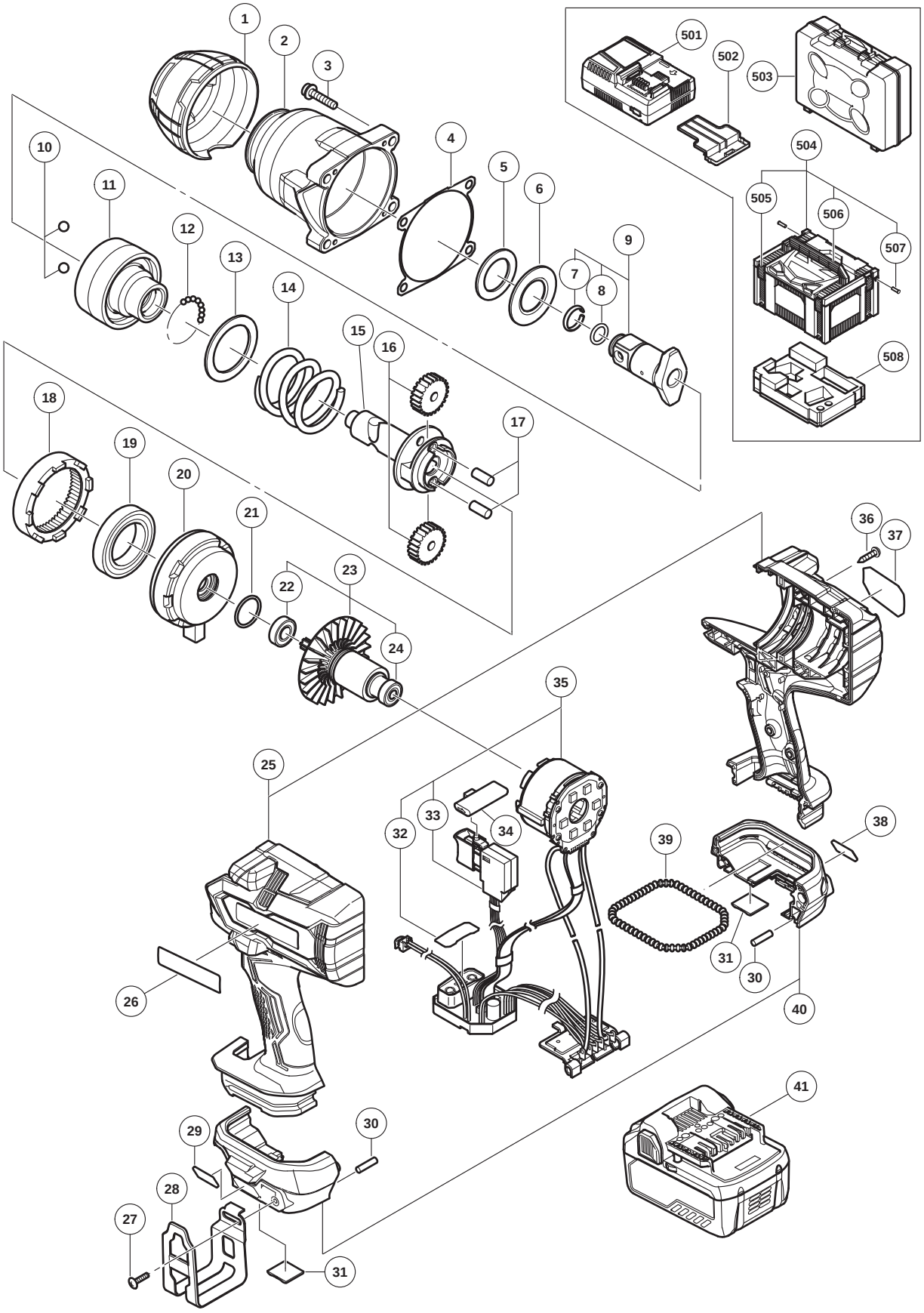

ITEM NO.	CODE NO.	DESCRIPTION	NO. USED	REMARKS	
1	373036	FRONT CAP	1		
2	373037	HAMMER CASE	1		
3	373377	HEX. SOCKET HD. BOLT (W/FLANGE) M6 X 30	4		
4	373302	PACKING	1		
5	373045	THRUST DAMPER	1		
6	373044	WASHER (F)	1		
7	373034	FRICTION RING (C)	1		
8	996407	O-RING (1AP-12)	1		
9	373033	ANVIL (A)	1	INCLUD.7,8	
10	959151	STEEL BALL D7.14 (10 PCS.)	2		
11	373043	HAMMER	1		
12	959155	STEEL BALL D3.97 (10 PCS.)	36		
13	373038	WASHER (J)	1		
14	373042	HAMMER SPRING	1		
15	373048	SPINDLE	1		
16	373300	IDLE GEAR SET (2 PCS.)	2		
17	373049	NEEDLE ROLLER	2		
18	373047	RING GEAR	1		
19	334310	BALL BEARING 61907 (GB)	1		
20	373046	INNER COVER	1		
21	887302	O-RING (I.D 21.5)	1		
22	371033	BALL BEARING 6900VVCM	1		
23	361077	ROTOR ASS'Y	1	INCLUD.22,24	
24	607VVC	BALL BEARING 607VV	1		
25	373031	HOUSING (A). (B) SET	1		
26		BRAND LABEL	1		
27	373378	TRUSS HD. SCREW M4 (BLACK)	1		
28	373035	HOOK	1		
29		MV LABEL (B)	1		
30	373041	REAR BUMPER	2		
31	373040	SIDE BUMPER	2		
32		PANEL SHEET (A)	1		
33	339217	DC-SPEED CONTROL SWITCH	1		
34	373301	PUSHING BUTTON	1		
35	373029	WIRING ASS'Y	1	INCLUD.32,33	
36	339250	TAPPING SCREW (W/FLANGE) D4 X 20	9		
37		NAME PLATE	1		
38		MV LABEL (A)	1		
39	373039	JOINT RUBBER	1		
40	373032	HOUSING (C). (D) SET	1		
* 41	371750	BATTERY BSL 36A18 (EUROPE,AUS,NZL)	2	INCLUD.502	
* 41	373320	BATTERY BSL 36A18 (CHN)	2	INCLUD.502	

STANDARD ACCESSORIES

	ITEM NO.	CODE NO.	DESCRIPTION	NO. USED	REMARKS	
	501		CHARGER (MODEL UC 18YSL3)	1		
	502	329897	BATTERY COVER	1		
*	503	373222	CASE	1		
*	504	337108	CASE ASS'Y (STACKABLE 3)	1	INCLUD.505-507	
*	505	336472	LATCH	4		
*	506	336473	HANDLE	1		
*	507	336474	HINGE	2		
*	508	373223	BOTTOM CUSHION	1		

OPTIONAL ACCESSORIES

ITEM NO.	CODE NO.	DESCRIPTION	NO. USED	REMARKS	
601	306927	SILICONE RUBBER	1		
602	309922	GREASE (ATTOLUB MS NO.2) 500G	1		
603	325149	GREASE (MOLUB-ALLOY NO.777-1) 75G	1		

*ALTERNATIVE PARTS

Printed in Japan
(180228N)