Hitachi Power Tools

LIST NO. G843

ELECTRIC TOOL PARTS LIST

■ CORDLESS IMPACT DRIVER 2006・5・25

Model WH 14DAF2 (E1)

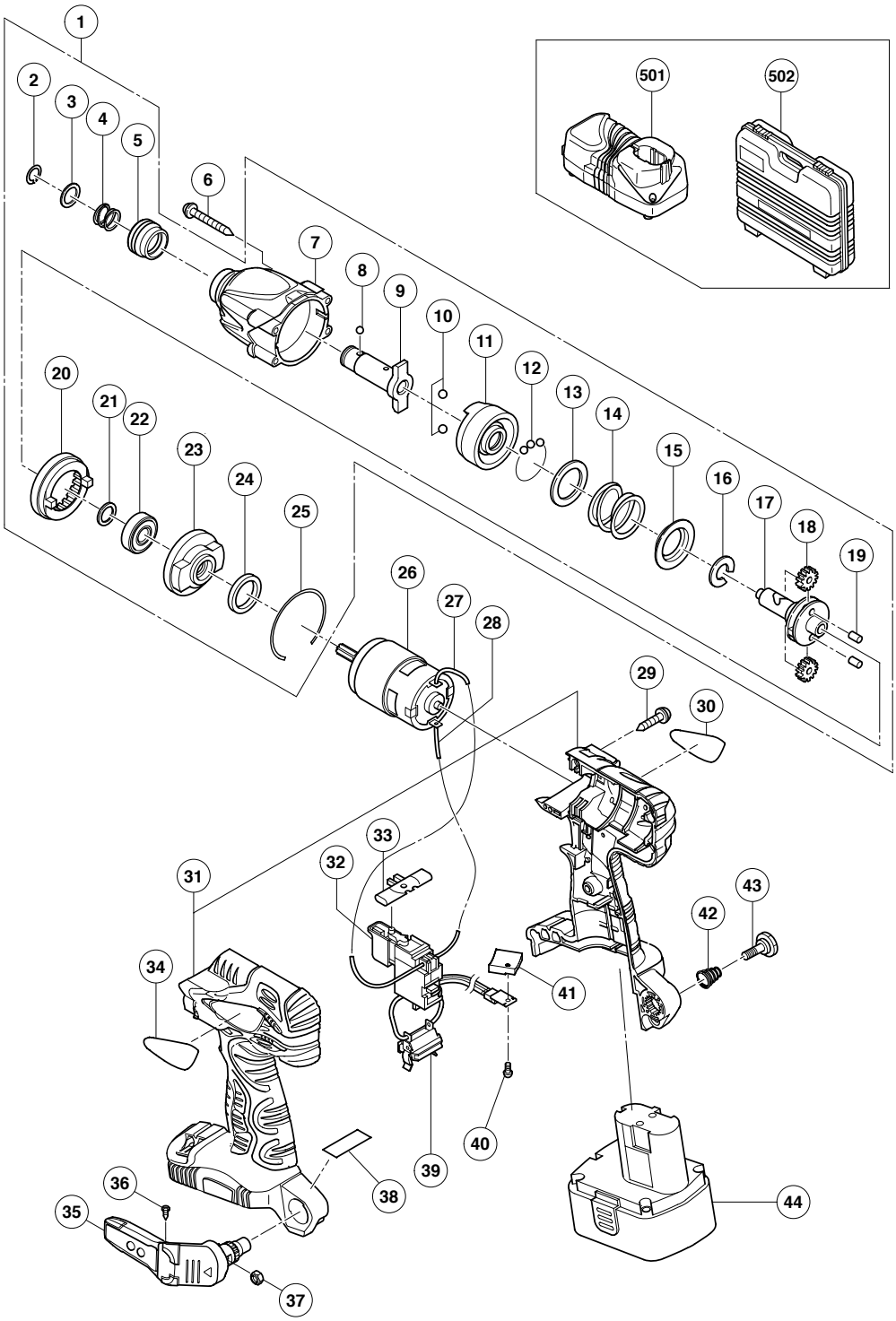

ITEM NO.	CODE NO.	DESCRIPTION	NO. USED	REMARKS	
1	324-854	GEAR BOX (B) ASS'Y	1	INCLUD. 2-5, 7-25	
2	315-984	RETAINING RING	1		
3	315-983	WASHER (D)	1		
4	320-409	GUIDE SPRING	1		
5	323-954	GUIDE SLEEVE	1		
6	992-630	TAPPING SCREW (W/SP. WASHER) D4X40	4		
7	323-940	HAMMER CASE	1		
8	319-535	STEEL BALL D3.5 (10 PCS.)	1		
9	321-915	ANVIL (B)	1		
10	959-154	STEEL BALL D5.556 (10 PCS.)	2		
11	323-949	HAMMER	1		
12	321-934	STEEL BALL D3 (10 PCS.)	28		
13	315-978	WASHER (J)	1		
14	323-944	HAMMER SPRING	1		
15	316-172	WASHER (S)	1		
16	316-171	STOPPER	1		
17	323-945	SPINDLE (B)	1		
18	323-941	IDLE GEAR SET (2 PCS.)	2		
19	323-942	NEEDLE ROLLER	2		
20	323-946	RING GEAR	1		
21	319-911	WASHER (E)	1		
22	690-1VV	BALL BEARING 6901VVCMPS2L	1		
23	323-947	INNER COVER	1		
24	321-894	DAMPER	1		
25	321-893	RETAINING RING	1		
26	326-102	MOTOR	1		
27	321-876	INTERNAL WIRE (RED) 115L	1		
28	326-184	INTERNAL WIRE (BLACK) 65L	1		
29	302-086	TAPPING SCREW (W/FLANGE) D4X20 (BLACK)	7		
30		NAME PLATE	1		
31	326-103	HOUSING (A).(B) SET	1		
32	326-104	DC-SPEED CONTROL SWITCH	1		
33	321-871	PUSHING BUTTON	1		
34		HITACHI LABEL	1		
35	321-918	HOOK ASS'Y (W/LIGHT)	1	INCLUD. 36, 37	
36	321-672	TAPPING SCREW D2X6	2		
37	320-288	V-LOCK NUT M5	1		
38		CAUTION PLATE (B)	1		
39	323-710	TERMINAL SUPPORT	1		
40	320-777	MACHINE SCREW (W/SP. WASHER) M3X4	1		
41	320-776	FIN	1		
42	319-926	HOOK SPRING	1		
43	320-881	SPECIAL SCREW (A) M5	1		
44	324-367	BATTERY EB 1414S (W/ENGLISH N.P)	2		

* ALTERNATIVE PARTS

STANDARD ACCESSORIES

ITEM NO.	CODE NO.	DESCRIPTION	NO. USED	REMARKS	
501		CHARGER (MODEL UC 18YG)	1		
502	324-359	CASE	1		

OPTIONAL ACCESSORIES

ITEM NO.	CODE NO.	DESCRIPTION	NO. USED	REMARKS	
601	992-671	+ DRIVER BIT (B) NO. 2 50L	1		
602	992-672	+ DRIVER BIT (B) NO. 3 50L	1		
603	992-689	NON-MAGNETIC HEX. SOCKET 7MM 65L	1		
604	996-177	NON-MAGNETIC HEX. SOCKET 8MM 65L	1		
605	985-329	NON-MAGNETIC HEX. SOCKET 10MM 65L	1		
606	996-178	NON-MAGNETIC HEX. SOCKET 12MM 65L	1		
607	996-179	NON-MAGNETIC HEX. SOCKET 13MM 65L	1		
608	996-180	NON-MAGNETIC HEX. SOCKET 14MM 65L	1		
609	996-181	NON-MAGNETIC HEX. SOCKET 16MM 65L	1		
610	996-182	NON-MAGNETIC HEX. SOCKET 17MM 65L	1		
611	996-197	HEX. SOCKET (LONG) 21MMX166L	1		
612	321-823	DRILL CHUCK AND ADAPTER SET	1	INCLUD. 613, 614	
613	987-575	CHUCK WRENCH FOR 10VLB-D, 10VLR-D	1		
614	307-543	CHUCK ADAPTER	1		
615	309-922	GREASE FOR IMPACT DRIVER (500G)	1		

* ALTERNATIVE PARTS

ITEM NO.	CODE NO.	DESCRIPTION	NO. USED	REMARKS	