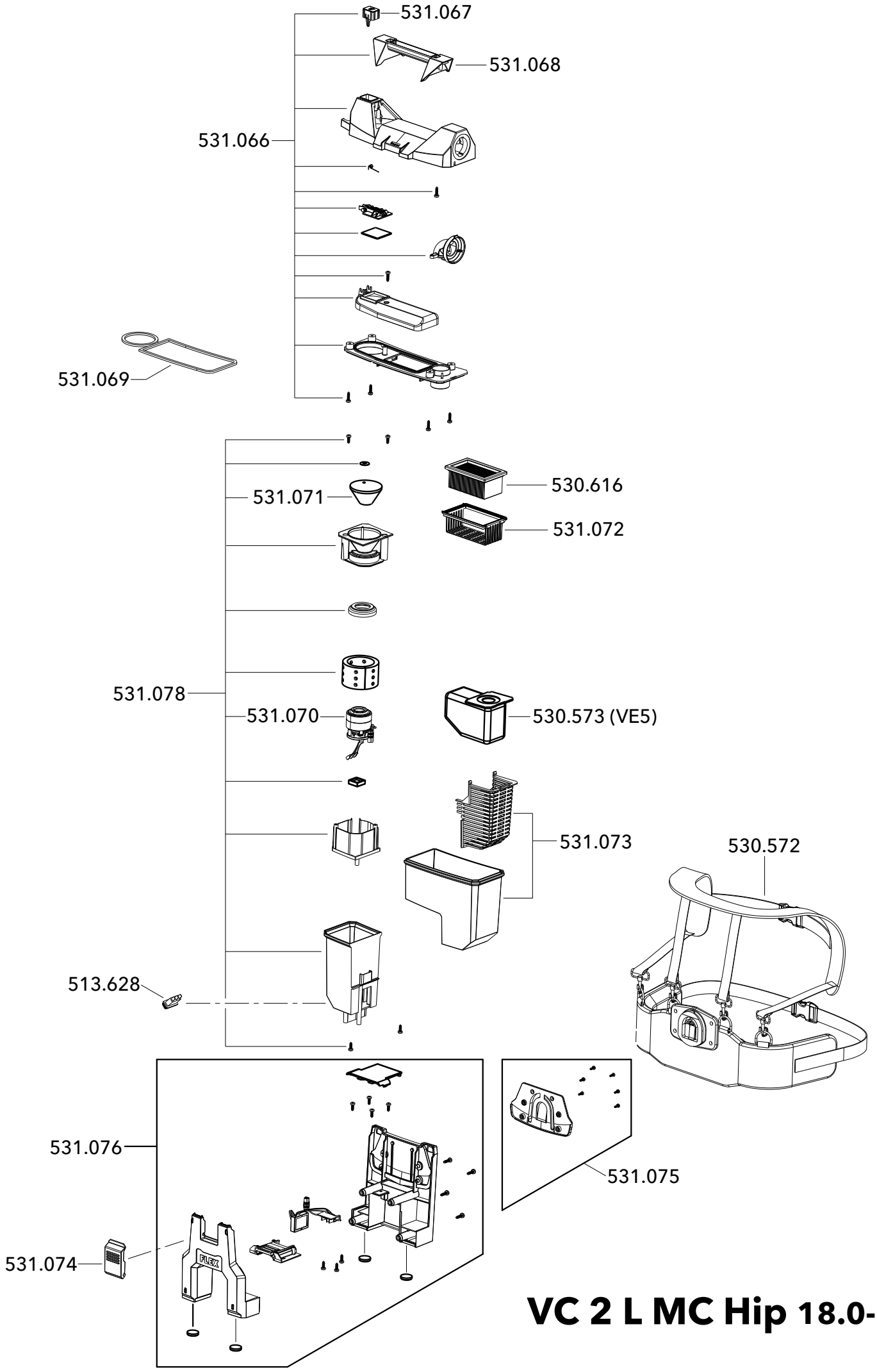

VC 2 L MC Hip 18.0-EC