makita 7-1/4" CIRCULAR SAW Model SR1800

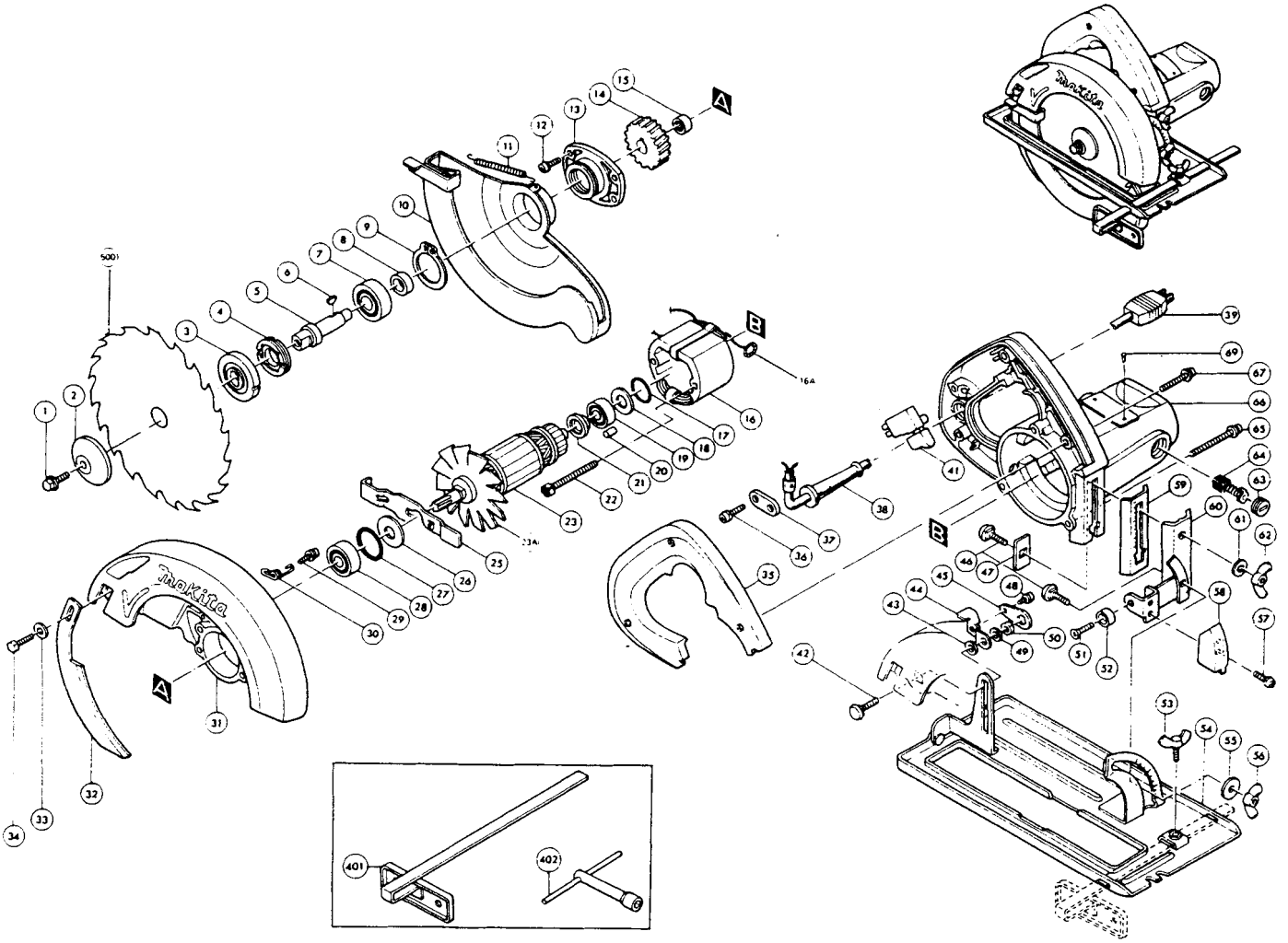

Item No.	Part No.	No. Used	Description	
1	251609-3	1	BOLT	M6x17
2	224059-5	1	OUTER FLANGE	
3	224058-7	1	INNER FLANGE	
4	285802-7	1	BEARING RETAINER	
5	325252-5	1	SPINDLE	
6	254011-9	1	WOODRUFF KEY	4
7	211106-1	1	BALL BEARING	6201LLB
8	257012-6	1	RING	12
9	961155-5	1	RETAINING RING	S—38
10	164559-2	1	SAFETY COVER	
11	231730-4	1	TENSION SPRING	4
12	911126-2	4	SCREW	M4x16
13	315313-9	1	BEARING BOX	
14	221685-1	1	GEAR	
15	212004-2	1	NEEDLE BEARING	810
16	622521-8	1	FIELD With Item No. 16A	
16A	654019-7	2	GARTER SPRING	
17	213255-0	1	O RING	18
18	253192-6	1	WASHER	14
19	211031-6	1	BALL BEARING	608LLB
20	263002-9	1	RUBBER PIN	4
21	681603-5	1	INSULATION WASHER	
22	925283-0	2	BOLT	M5x60
23	612731-5	1	ARMATURE ASSEMBLY (Includes Item No. 19, 21, 23A)	
23A	241091-4	1	FAN	
25	341699-5	1	SPINDLE LOCK	
26	253769-7	1	WASHER	10
27	213406-5	1	O RING	30
28	211066-7	1	BALL BEARING	6200LLB
29	911124-6	1	SCREW	M4x14
30	231549-1	1	TORSION SPRING	6
31	154278-8	1	BLADE CASE	
32	341701-4	1	RIVING KNIFE	
33	941151-9	1	WASHER	6
34	265251-4	1	BOLT	M6x16
35	411833-2	1	HANDLE COVER	
36	911131-9	2	SCREW	M4x18
37	687000-3	1	STRAIN RELIEF	
38	682504-0	1	CORD GUARD	
39	664213-3	1	CORD With Plug	
41	651203-5	1	SWITCH	
42	251919-8	1	BOLT	M6x20
43	253010-8	1	WASHER	6
44	341717-9	1	LEVER PLATE	
45	341718-7	1	LOCK PLATE	
46	251919-8	2	BOLT	M6x20
47	341700-6	1	PLATE	
48	911101-8	1	SCREW	M4x6
49	253804-1	1	WASHER	6
50	931302-2	1	NUT	M6
51	251288-7	1	SCREW	M5x20
52	262502-6	1	RUBBER SLEEVE	6
53	924201-5	1	WING SCREW	
54	168083-7	1	BASE	
55	253010-8	1	WASHER	6
56	934301-3	1	WING NUT	M6
57	911106-8	2	SCREW	M4x8
58	341702-2	1	FRONT GUARD	
59	341698-7	1	SLIDE PLATE	
60	164560-7	1	ANGULAR PLATE	
61	941151-9	1	WASHER	6
62	934301-3	1	WING NUT	M6
63	643600-9	2	BRUSH CAP	
64	643101-7	2	CARBON BRUSH	CB-101
65	911268-2	3	SCREW	M5x45
66	156790-4	1	MOTOR HOUSING (With 2 ea. of Brush Holder 643603-3 & Screw M5x8 913206-0)	
67	911153-9	3	SCREW	M4x28
69	953101-2	2	RIVET	
401	164095-8	1	GUIDE RULE	
402	782209-3	1	SOCKET WRENCH	9

ACCESSORY

500	721245-4	1	7¼" COMBINATION BLADE	