RYOBI 1/3 SHEET SANDER – MODEL NUMBER S630D

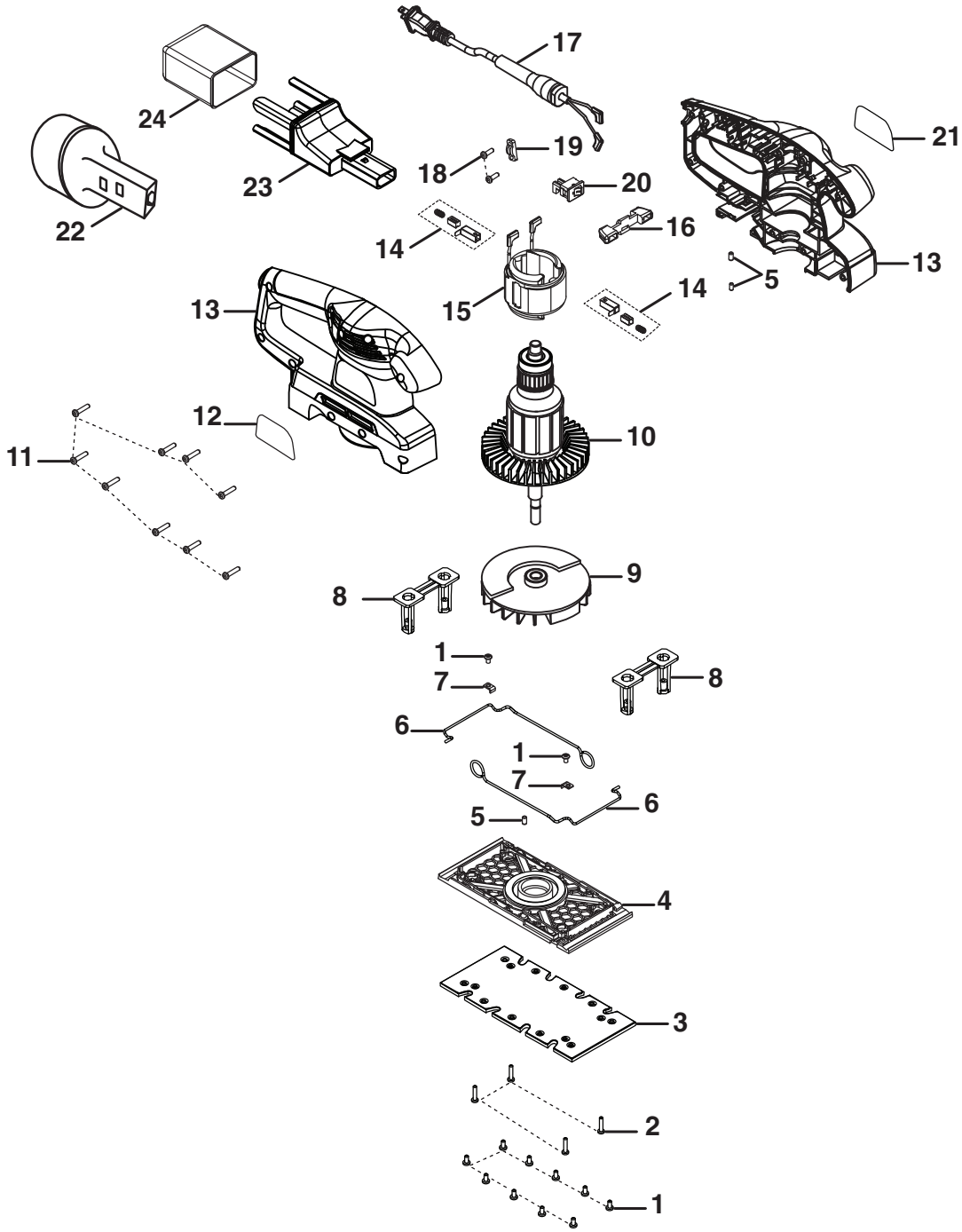

RYOBI 1/3 SHEET SANDER – MODEL NUMBER S630D

The model number will be found on a label attached to the motor housing. Always mention the model number in all correspondence regarding your **PAINT BRUSH CLEANER** or when ordering parts.

PARTS LIST

KEY NO.	PART NUMBER	DESCRIPTION	QTY
1	030155001003	Screw (M4.2 x 8 mm)	12
2	030155001002	Screw (M4.2 x 16 mm)	4
3	030156001002	Pad Assembly	1
	030156001001	Platen Assembly (Inc. Key Nos. 1-7)	1
4	030156001004	Platen	1
5	030155001007	Cushion	3
6	030156001005	Spring Clamp	2
7	030156001006	Retaining Plate	2
8	030156001008	Post Cushion	2
9	030156001009	Fan Assembly	1
10	030156001010	Armature Assembly	1
11	030155001016	Screw (M4.2 x 20 mm)	9
12	039156004001	Data Label	1
13	039156004002	Housing Assembly	1
14	030155001013	Brush Assembly	2
15	030156001013	Field Assembly	1
16	039156004003	Switch Trigger	1
17	030156001015	Power Cord Assembly	1
18	030155001024	Screw (M4.2 x 14 mm)	2
19	030155001021	Cord Clamp	1
20	030156001030	Switch	1
21	039156004004	Logo Label	1
22	030156001020	Vacuum Hose Adaptor (1-1/4 in.)	1
23	039156004005	Dust Bag Assembly (Inc. Key No. 24)	1
24	039156004006	Dust Bag	1

Not Shown:

987000924 Operator's Manual (039745001066)
12-17-09
(Rev:01)