S 44 L AC

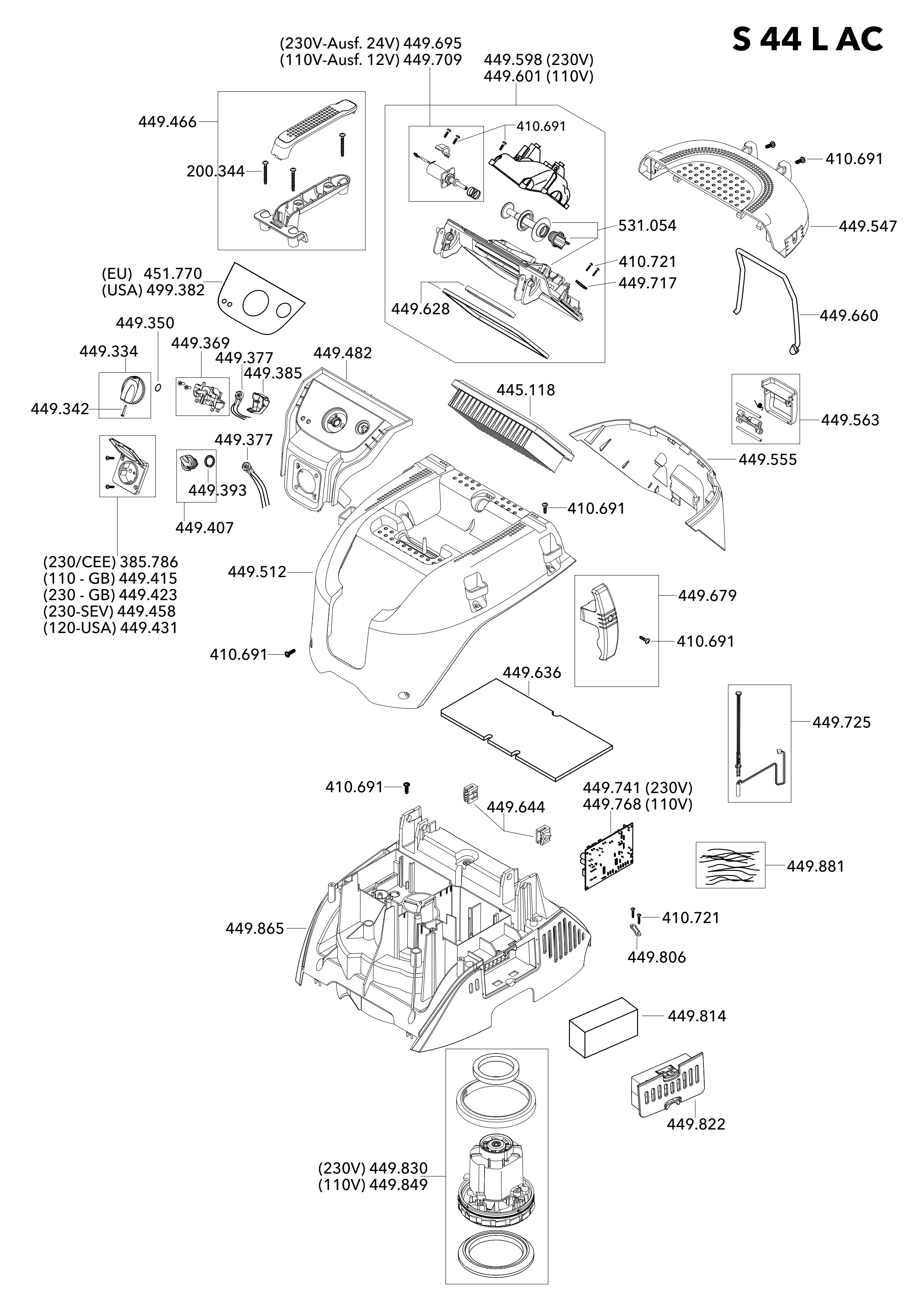
(230V-Ausf. 24V) 449.695
(110V-Ausf. 12V) 449.709
449.598 (230V)
449.601 (110V)
449.466
200.344
410.691
531.054
410.721
449.717
449.628
410.691
449.547
449.660
(EU) 451.770
(USA) 499.382
449.350
449.334
449.342
449.369
449.377
449.385
449.482
445.118
449.563
449.555
449.377
449.393
449.407
410.691
(230/CEE) 385.786
(110 - GB) 449.415
(230 - GB) 449.423
(230-SEV) 449.458
(120-USA) 449.431
449.512
449.679
410.691
410.691
449.636
449.725
410.691
449.644
449.741 (230V)
449.768 (110V)
449.881
449.865
410.721
449.806
449.814
449.822
(230V) 449.830
(110V) 449.849