IMPACT DRILL

PD-1410AVR

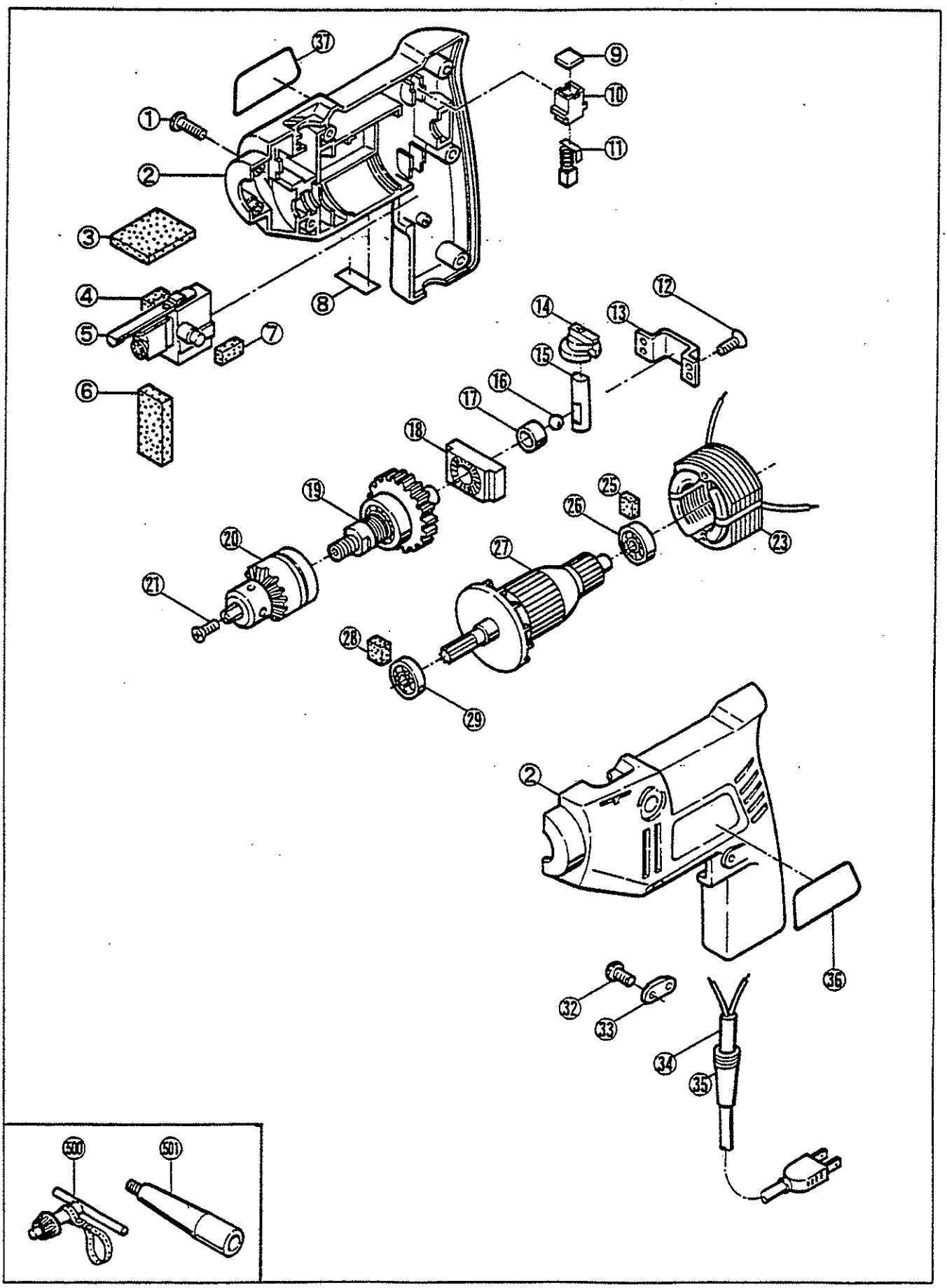

PARTS LIST FOR AFTER SALES SERVICE
MODEL PD1410AVR

	PART NO.	DESCRIPTION	QTY	REF	PART NO.	DESCRIPTION	QTY
1	9060420	TAPPING SCREW (B) M4X20	7	21	6130388	FLAT SCREW (L.H.T.) M5X16	1
2	6080617	MOTOR HOUSING	1	23	6500964	FIELD COIL	1
3	6370152	DUST SPONGE	1	25	6370153	RUBBER PLATE	1
4	6370154	CLAMP SPONGE	1	26	622274001	BALL BEARING #608LLB	1
5	6550237	VAR. & REVERSIBLE SWITCH	1	27	6031202	ARMATURE	1
6	6370151	DUST SPONGE	1	28	6370153	RUBBER PLATE	1
7	6370154	CLAMP SPONGE	1	29	622274001	BALL BEARING #608LLB	1
8	6920387	INDICATION LABEL	1	32	9060418	TAPPING SCREW (B) M4X18	2
9	6360372	INSULATION PLATE	2	33	6560055	CORD CLAMP	1
10	6570058	BRUSH HOLDER	2	34	6520331	CORD ASS'Y AWG#18X2X2	1
11	6540743	CARBON BRUSH SET	1	35	6560131	CORD HOLDER	1
12	9140310	PHILLIPS FLAT SCREW M3X10	4	36	6921654	"RYOBI" MARK	1
13	6151139	RADIATION PLATE	1	37	6913750	NAME PLATE	1
14	6360144	BUTTON	1	—	6530232	FASTEN SLEEVE	2
15	6120105	CHANGE PIN	1	—	9674318	LEAD WIRE	1
16	6290032	STEEL BALL 7/32"	1				
17	9911010	NEEDLE BEARING	1				
18	6190081	FIXED CLUTCH	1		STANDARD ACCESSORIES		
19	6050031	FINAL GEAR	1	500	6240563	CHUCK KEY	1
20	6940323	10MM (3/8") DRILL CHUCK	1	501	6830923	AUX. HANDLE	1
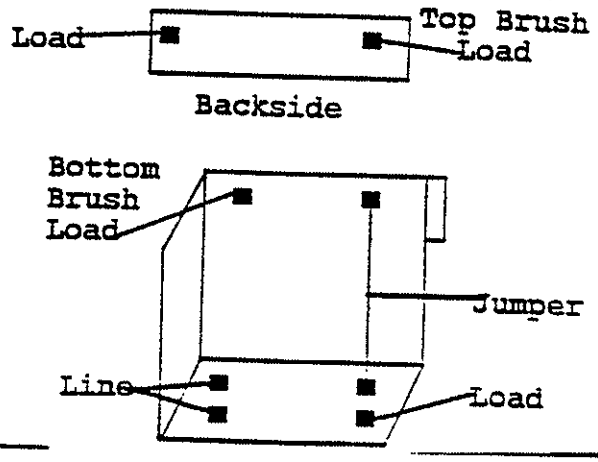
SERVICE NOTES: