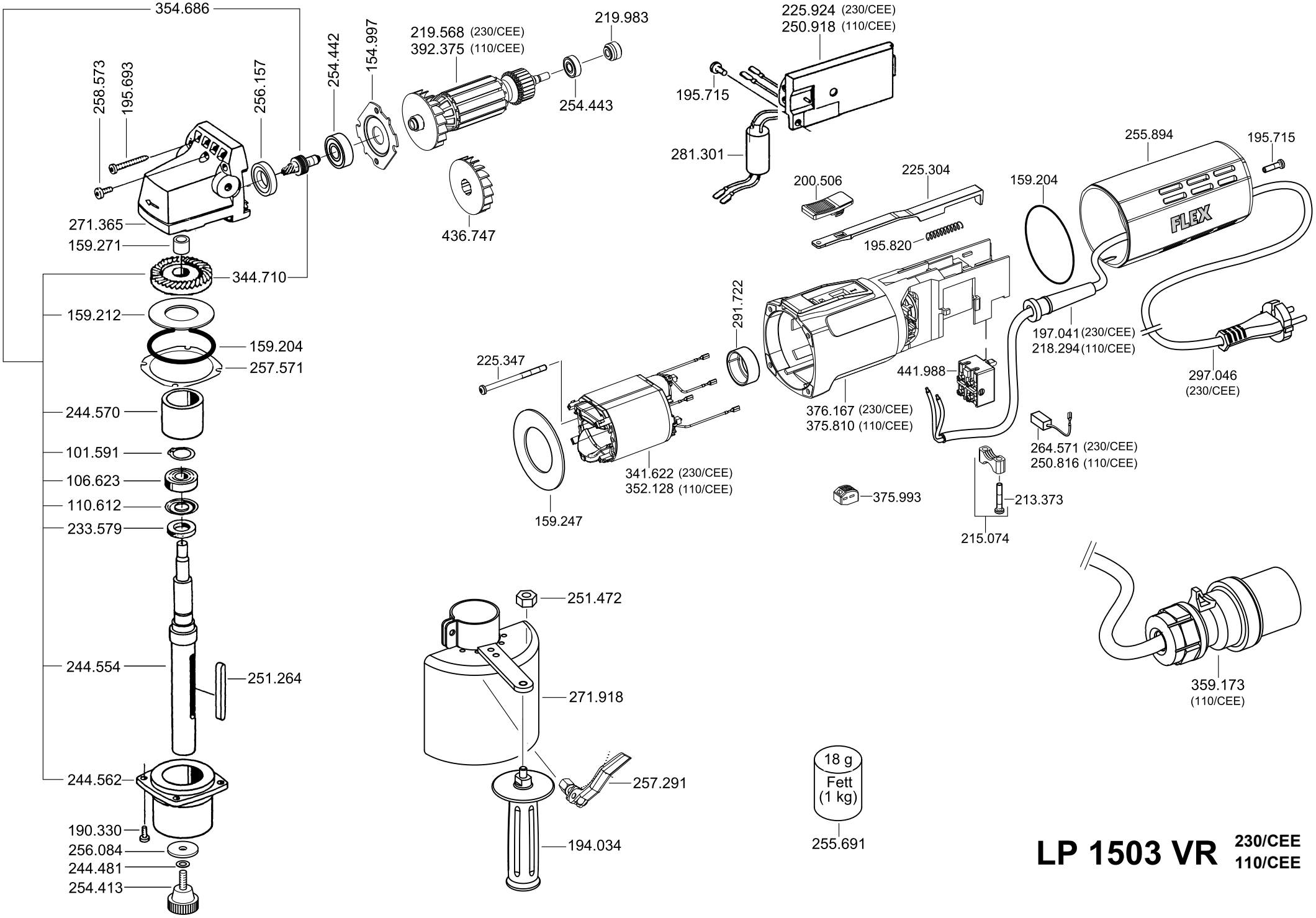

LP 1503 VR 230/CEE 110/CEE