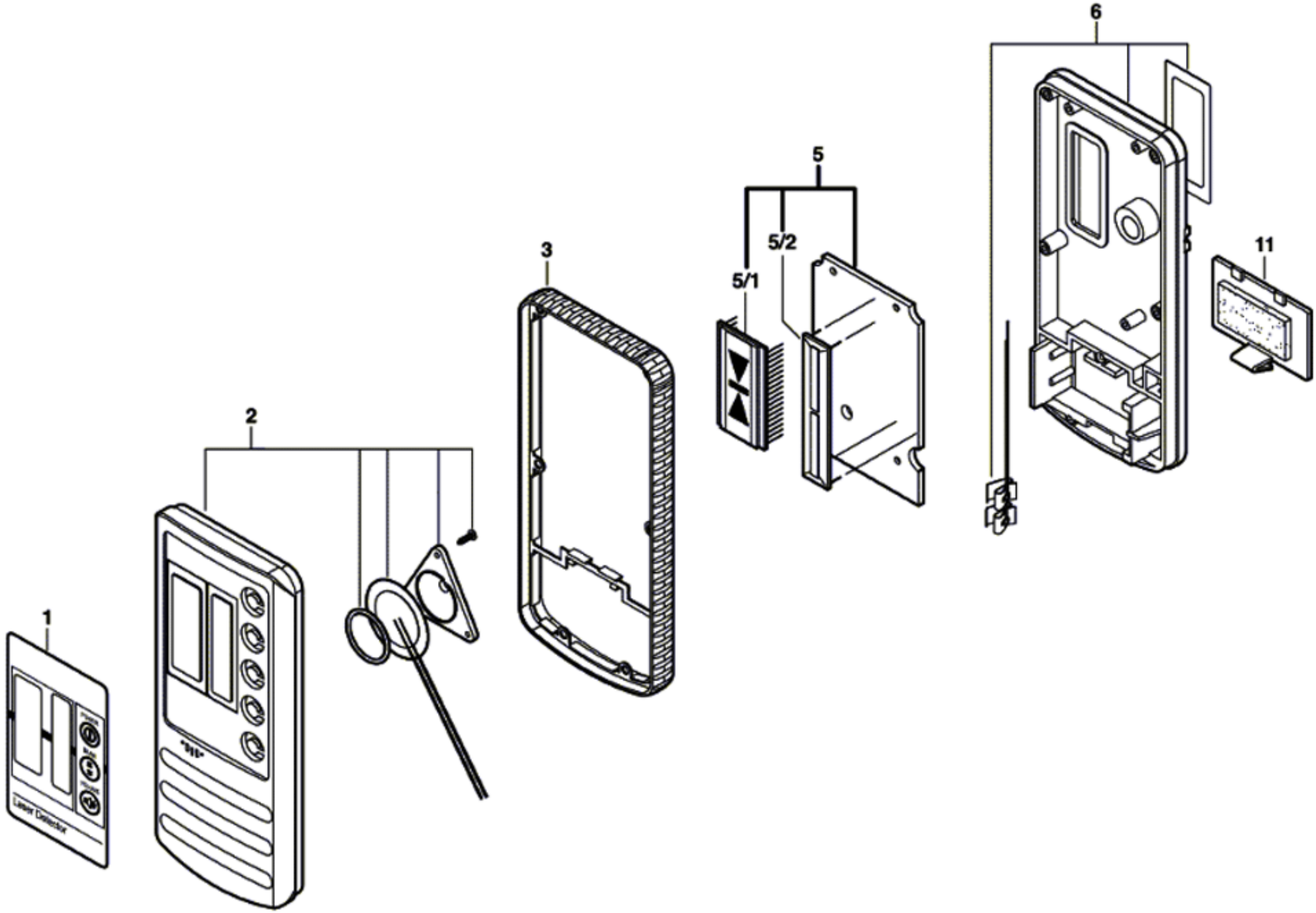
6
5
5/2
5/1
3
11
2
1
Laser Detector