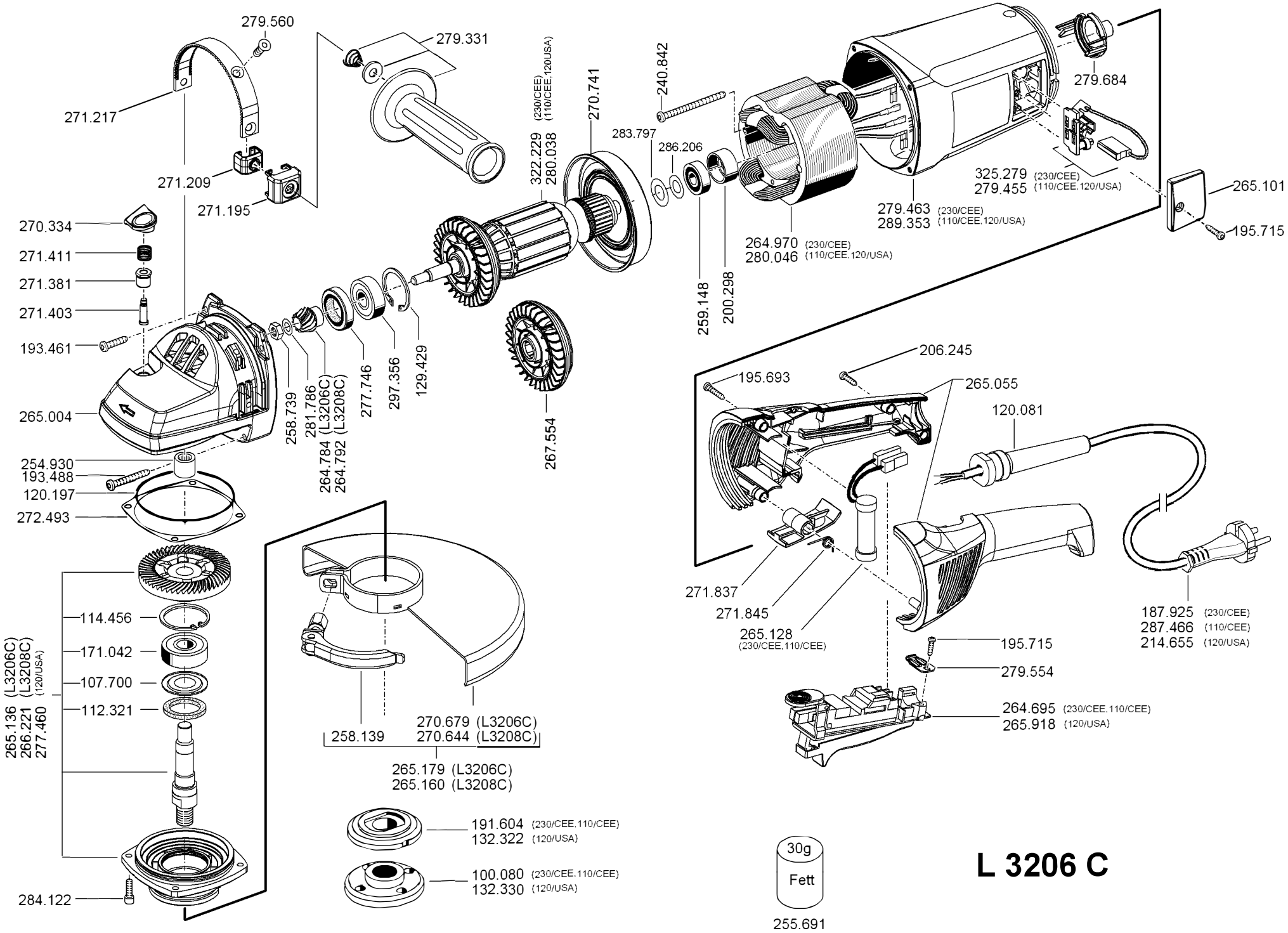
279.560
279.331
271.217
271.209
271.195
270.334
271.411
271.381
271.403
193.461
265.004
254.930
193.488
120.197
272.493
114.456
171.042
107.700
112.321
265.136 (L3206C)
266.221 (L3208C)
277.460 (120/USA)
284.122
258.739
281.786 (L3206C)
264.784 (L3208C)
264.792 (L3208C)
277.746
297.356
129.429
322.229 (230/CEE)
280.038 (110/CEE.120USA)
270.741
267.554
283.797
286.206
240.842
259.148
200.298
264.970 (230/CEE)
280.046 (110/CEE.120/USA)
279.463 (230/CEE)
289.353 (110/CEE.120/USA)
325.279 (230/CEE)
279.455 (110/CEE.120/USA)
279.684
265.101
195.715
206.245
195.693
265.055
120.081
271.837
271.845
265.128
(230/CEE.110/CEE)
195.715
279.554
264.695 (230/CEE.110/CEE)
265.918 (120/USA)
187.925 (230/CEE)
287.466 (110/CEE)
214.655 (120/USA)
258.139
270.679 (L3206C)
270.644 (L3208C)
265.179 (L3206C)
265.160 (L3208C)
191.604 (230/CEE.110/CEE)
132.322 (120/USA)
100.080 (230/CEE.110/CEE)
132.330 (120/USA)
30g
Fett
255.691
L 3206 C