HITACHI

SLAP TACKER PARTS LIST

■ SLAP TACKER 2008 • 05 • 30

Model HHT11A50 / HHT50DF (E1)

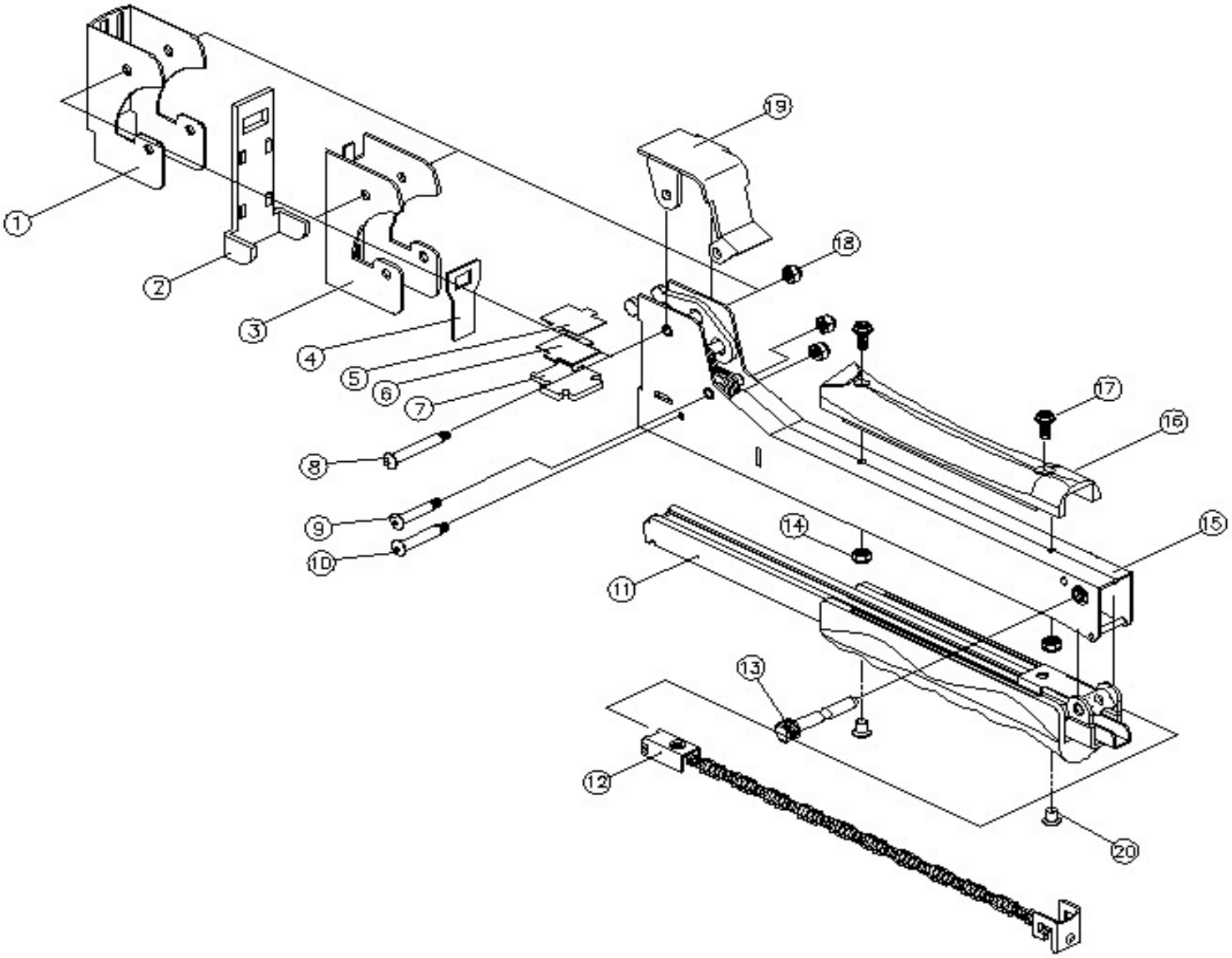

WWW.HITACHIPOWERTOOLS.COM for more Breakdowns

Item #	Code #	DESCRIPTION	NO USED	Remarks
1	727042	FRONT COVER	1	
2	727043	KNOCK PLATE	1	
3	727044	COVER (INNER)	1	
4	727045	DRIVING PLATE HHT11A50	1	USE A11 STAPLES
4	727046	DRIVING PLATE HHT50DF	1	USE DF50 STAPLES
5	727047	SPACER	1	
6	727048	SPACER BUMPER	1	RUBBER
7	727049	LOWER SPACER	1	
8	727050	SCREW BOLT (L=37 mm)	1	
9	727051	SCREW BOLT (L=30.5 mm)	1	
10	727052	SCREW BOLT (L=32.5 mm)	1	
11	727053	MAGAZINE ASSEMBLY (F/ Model HHT11A50)	1	USE A11 STAPLES
11	727054	MAGAZINE ASSEMBLY (F/ Model HHT50DF)	1	USE DF50 STAPLES
12	727055	PUSHER ROD ASSEMBLY (F/ Model HHT11A50)	1	USE A11 STAPLES
12	727056	PUSHER ROD ASSEMBLY (F/ Model HHT50DF)	1	USE DF50 STAPLES
13	727057	PIVOT PIN	1	
14	727058	NUT M5	2	
15	727059	MAIN BODY ASSEMBLY	1	
16	727060	PU HANDEL GRIP (UPPER)	1	
17	727061	SCREW M5	2	
18	727058	NUT M5	3	
19	727063	TOP COVER	1	
20	727064	RIVET	2	
		Fasteners:		
		HHT11A50		
	11801	7/16"x5/16"		
	11802	7/16"x3/8"		
	11803	7/16"x1/2"		
	11804	7/16"x9/16"		
		HHT50DF		
	11698	1/2"x1/4"		
	11699	1/2"x5/16"		
	11700	1/2"x3/8"		