GX160K1(SX7)	E-11 RECOIL STARTER (1)

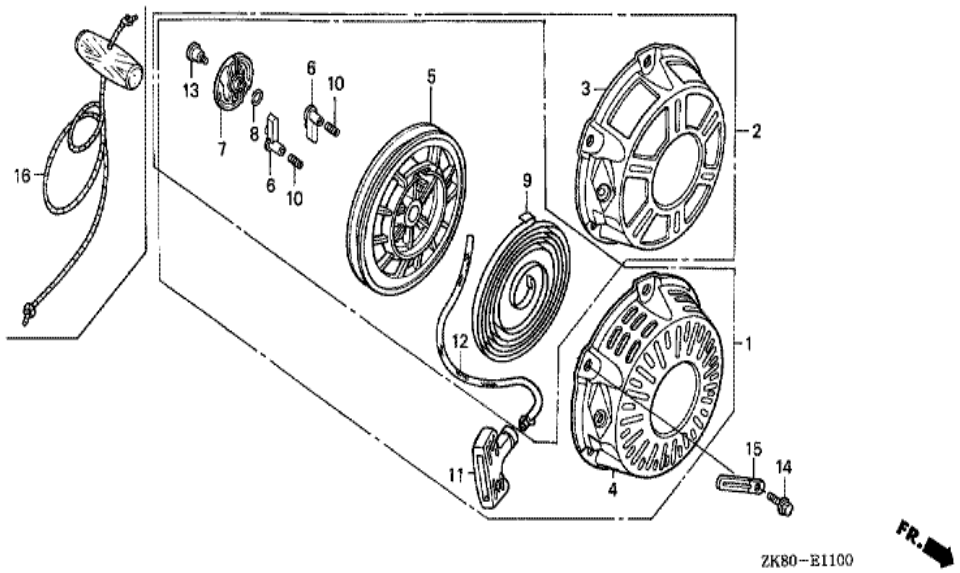

Ref	Partnumber	Description	GX160K1	Serial Numbers
001	28400-ZH8-013YA	STARTER ASSY., RECOIL *R280 *	1	8805657
004	28410-ZH8-003YA	CASE COMP., RECOIL STARTER *R280 *	1	8805657
005	28420-ZH8-013	REEL, RECOIL STARTER (NATURAL)	1	8805657
006	28422-ZH8-013	RATCHET, STARTER	2	8805657
007	28433-ZH8-003	GUIDE, RATCHET	1	8805657
008	28441-ZH8-003	SPRING, FRICTION	1	8805657
009	28442-ZH8-003	SPRING, RECOIL STARTER	1	8805657
010	28443-ZH8-003	SPRING, RETURN	2	8805657
011	28461-ZH8-003	GRIP, STARTER	1	8805657
012	28462-ZH8-003	ROPE, RECOIL STARTER	1	8805657
013	90003-ZH8-003	SCREW, SETTING	1	8805657
014	90008-ZE2-003	BOLT, FLANGE, 6X10	3	8805657

GX160K1(SX7)	E-11-3 RECOIL STARTER (4)

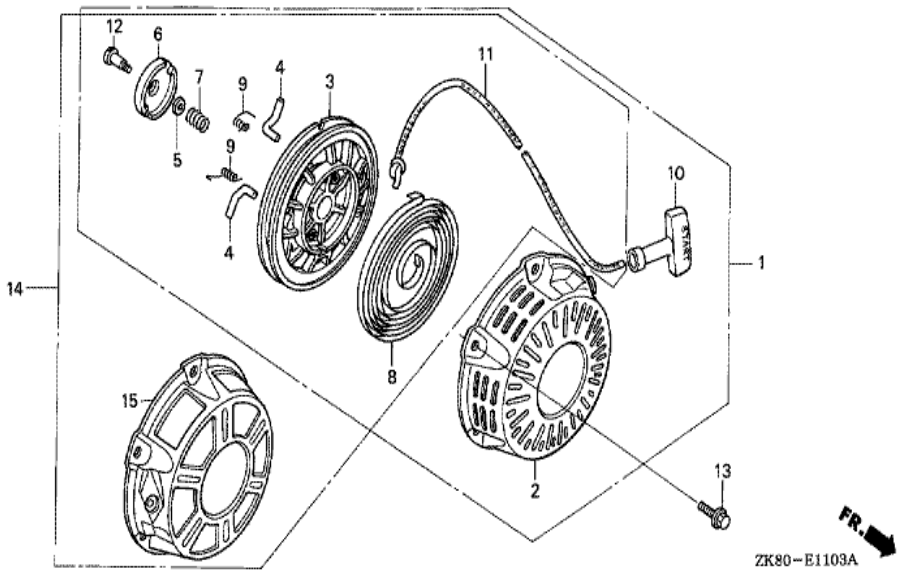

Ref	Partnumber	Description	GX160K1	Serial Numbers
001	28400-ZH8-023YA	STARTER ASSY., RECOIL *R280 *	1	8805658
002	28410-ZH8-003YA	CASE COMP., RECOIL STARTER *R280 *	1	8805658
003	28421-ZH8-801	REEL, RECOIL STARTER (BLACK)	1	8805658
004	28422-ZH8-801	RATCHET, STARTER	2	8805658
005	28431-ZH8-801	PLATE, FRICTION	1	8805658
006	28433-ZH8-801	GUIDE, RATCHET	1	8805658
007	28441-ZH8-801	SPRING, FRICTION	1	8805658
008	28442-ZH8-003	SPRING, RECOIL STARTER	1	8805658
009	28443-ZH8-801	SPRING, RETURN	2	8805658
010	28461-ZH8-003	GRIP, STARTER	1	8805658
011	28462-ZH8-003	ROPE, RECOIL STARTER	1	8805658
012	90003-ZH8-801	SCREW, SETTING	1	8805658
013	90008-ZE2-003	BOLT, FLANGE, 6X10	3	8805658

GX160K1(SX7)	E-12 FAN COVER

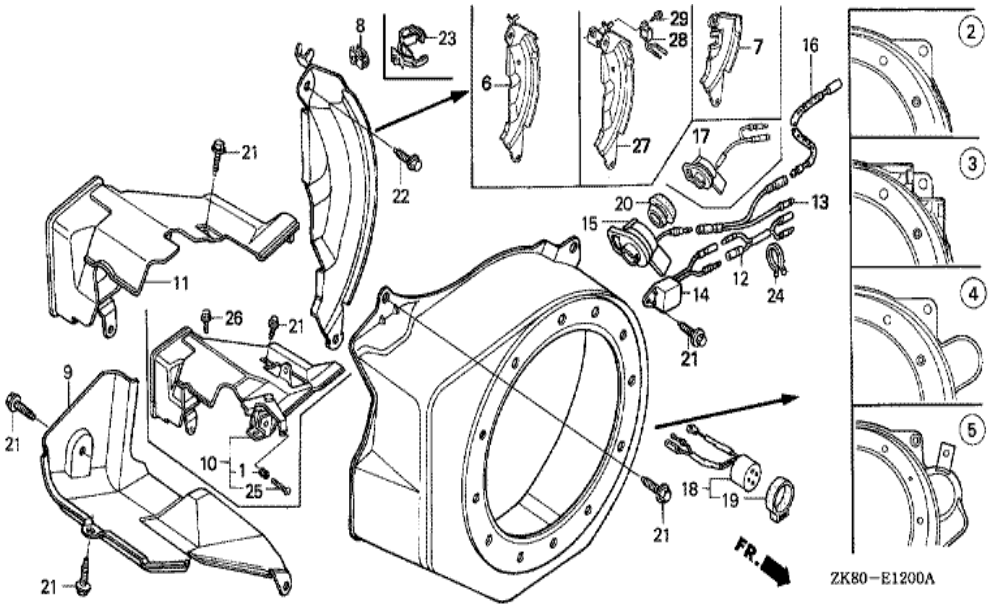

Ref	Partnumber	Description	GX160K1	Serial Numbers
002	19610-ZE1-000ZP	COVER COMP., FAN *R280 *	1	
009	19630-ZH8-000	SHROUD COMP.	1	
015	36100-ZH7-W41	SWITCH ASSY., ENGINE STOP	1	
021	90013-883-000	BOLT, FLANGE, 6X12 (CT200)	6	
022	90022-888-010	BOLT, FLANGE, 6X20 (CT200)	1	
023	90601-ZH7-013	CLIP, HARNESS	1	
027	19611-ZH8-810	PLATE COMP., SIDE (OIL ALERT)	1	
028	34150-ZH7-003	ALERT UNIT, OIL	1	
029	95701-0600800	BOLT, FLANGE, 6X8	1	

GX160K1(SX7)	E-14-2 CARBURETOR (3)

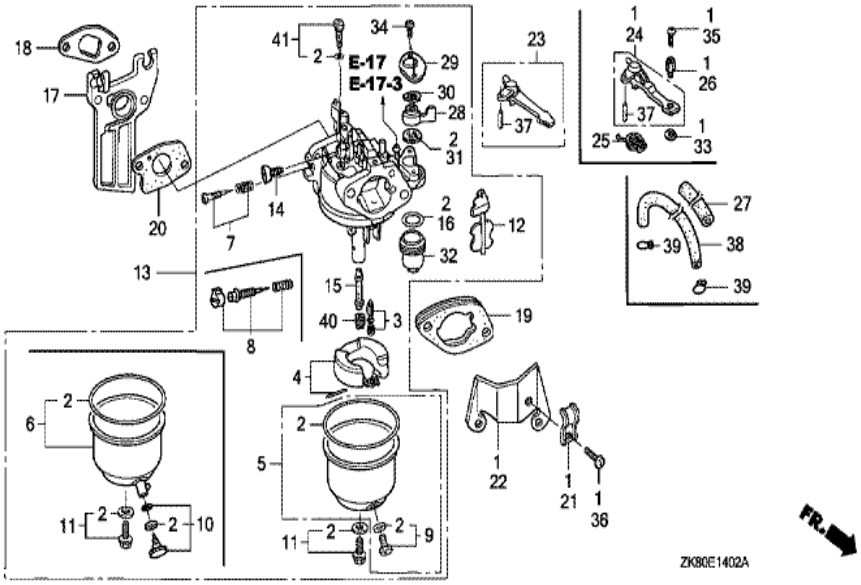

Ref	Partnumber	Description	GX160K1	Serial Numbers
002	16010-ZE1-812	GASKET SET	1	
003	16011-ZE0-005	VALVE SET, FLOAT	1	
004	16013-ZE0-005	FLOAT SET	1	
005	16015-ZE0-831	CHAMBER SET, FLOAT	1	
008	16016-ZH7-W01	SCREW SET, PILOT	1	
009	16024-ZE1-811	SCREW SET, DRAIN	1	
011	16028-ZE0-005	SCREW SET	1	
012	16044-ZE0-005	CHOKE SET	1	
013	16100-ZH8-W51	CARBURETOR ASSY. (BE65B B/C)	1	
014	16124-ZE0-005	SCREW, THROTTLE STOP	1	
015	16166-ZH8-W50	NOZZLE, MAIN	1	
016	16173-001-004	PACKING, FUEL STRAINER CUP	1	
017	16211-ZE1-000	INSULATOR, CARBURETOR	1	
Ref	Partnumber	Description	GX160K1	Serial Numbers
018	16212-ZH8-800	PACKING, INSULATOR	1	
019	16220-ZE1-020	SPACER COMP., CARBURETOR	1	
020	16221-ZH8-801	PACKING, CARBURETOR	1	
023	16610-ZE1-000	LEVER COMP., CHOKE (STD.)	1	
028	16953-ZE1-812	LEVER, COCK	1	
029	16954-ZE1-812	PLATE, LEVER SETTING	1	
030	16956-ZE1-811	SPRING, COCK LEVER	1	
031	16957-ZE1-812	PACKING, FUEL COCK	1	
032	16967-ZE0-811	CUP, FUEL STRAINER	1	
034	93500-030061H	SCREW, PAN, 3X6	2	
037	94305-20122	PIN, SPRING, 2X12	1	
040	99101-ZH80650	JET, MAIN, #65	1	
040	99101-ZH80680	JET, MAIN, #68	1	
040	99101-ZH80700	JET, MAIN, #70	1	
041	99204-ZE00350	JET SET, PILOT, #35	1	

GX160K1(SX7)	E-15 AIR CLEANER (1)

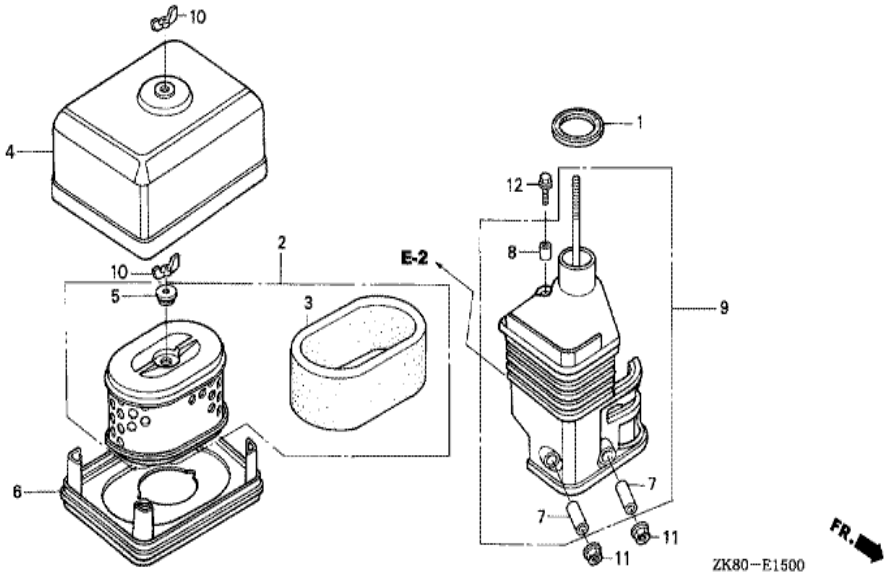

Ref	Partnumber	Description	GX160K1	Serial Numbers
001	16271-ZE1-000	PACKING, ELBOW	1	
002	17210-ZE1-822	ELEMENT, AIR CLEANER (DUAL)	1	
003	17218-ZE1-821	FILTER, OUTER	1	
004	17230-ZE1-820	COVER, AIR CLEANER (DUAL)	1	
005	17232-891-000	GROMMET, AIR CLEANER	1	
006	17235-ZE1-831	NOSE, SILENCER	1	
007	17238-ZE7-010	COLLAR, AIR CLEANER	2	
008	17239-ZE1-000	COLLAR B, AIR CLEANER	1	
009	17410-ZE1-020	ELBOW COMP., AIR CLEANER	1	
010	90325-044-000	NUT, TOOL BOX SETTING	2	
011	94050-06000	NUT, FLANGE, 6MM	2	
012	95701-0602000	BOLT, FLANGE, 6X20	1	

GX160K1(SX7)	E-16 MUFFLER (1)

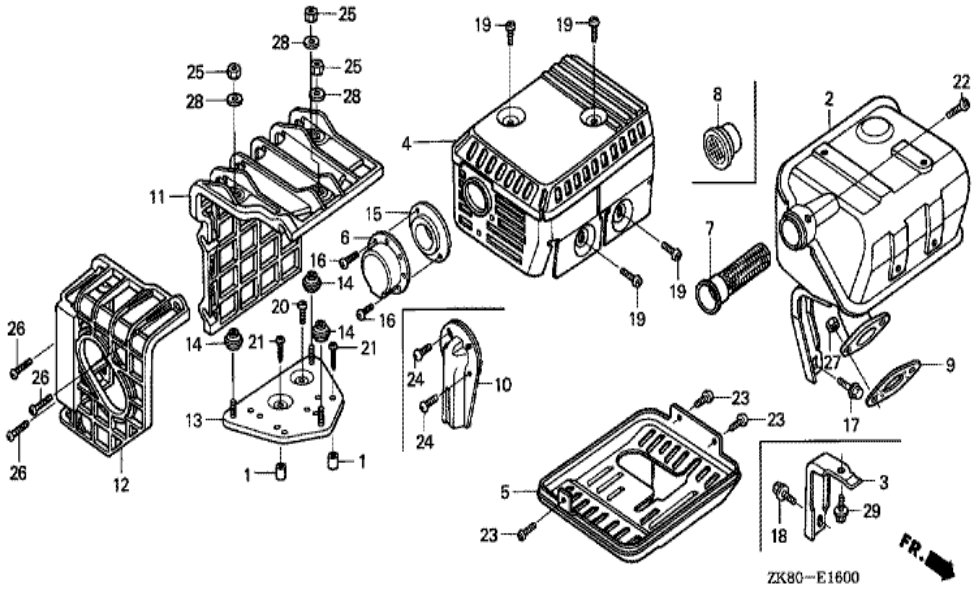

Ref	Partnumber	Description	GX160K1	Serial Numbers
001	17233-896-701	COLLAR, AIR CLEANER CASE	(2)	
002	18310-Z8K-870	MUFFLER COMP. (SILENT)	1	
003	18315-ZE1-000	STAY, MUFFLER	1	
004	18320-ZF1-H51	PROTECTOR, MUFFLER (SILENT)	1	
008	18361-ZL0-000	NETTING, WIRE FLANGE	1	
009	18381-ZH8-800	GASKET, MUFFLER	1	
011	18433-ZH8-W40	COVER COMP., MUFFLER	(1)	
012	18434-ZH8-W40	COVER COMP., RR. MUFFLER	(1)	
013	18436-ZH8-W40	BASE COMP., MUFFLER COVER	(1)	
014	18466-ZH8-W40	SPACER, MUFFLER COVER	(3)	
018	90016-ZE1-000	BOLT, FLANGE, 6X13 (CT200)	1	
019	90050-ZE1-000	SCREW, TAPPING, 5X8	4	
020	90050-ZE1-000	SCREW, TAPPING, 5X8	(1)	
Ref	Partnumber	Description	GX160K1	Serial Numbers
021	90050-ZH8-W40	SCREW, TAPPING, 5X25	(2)	
022	90056-ZL0-000	SCREW, TAPPING, 4X6	1	
025	90302-KF9-900	NUT, HEX., 5MM	(3)	
026	93891-0602007	SCREW-WASHER, 6X20	(3)	
027	94001-080000S	NUT, HEX., 8MM	2	
028	94103-05700	WASHER, PLAIN, 5MM	(3)	
029	95701-0601200	BOLT, FLANGE, 6X12	1	

GX160K1(SX7)	E-17 FUEL TANK (1)

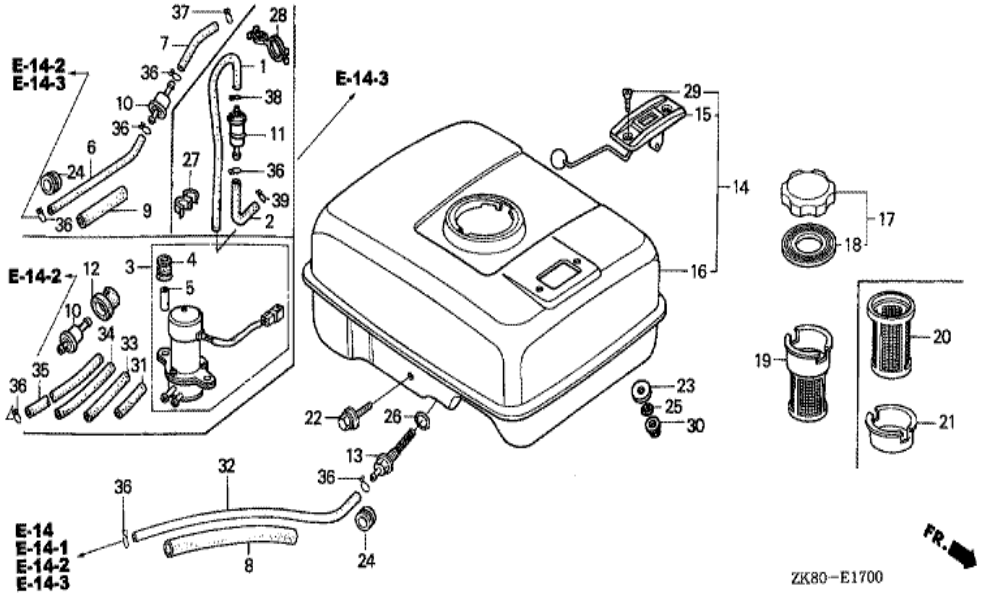

Ref	Partnumber	Description	GX160K1	Serial Numbers
008	16854-ZH8-000	RUBBER, SUPPORTER (107MM)	1	
013	16955-ZE1-000	JOINT, FUEL TANK	1	
016	17510-ZE1-020ZA	TANK COMP., FUEL *NH31 *	1	
016	17510-ZE1-020ZG	TANK COMP., FUEL *NH105 *	1	
017	17620-Z0T-305	CAP COMP., FUEL FILLER (CHROME PLATED)	1	
018	17631-Z0T-812	PACKING, FUEL FILLER CAP (39X62X3) (TOUY	1	
022	90004-ZH7-003	BOLT, FLANGE, 6X29	1	
026	91353-671-004	O-RING, 14MM (NOK)	1	
030	94050-06000	NUT, FLANGE, 6MM	2	
032	95001-4514040	TUBE, FUEL, 4.5X140 (95001-45001-60M)	1	
036	95002-02080	CLIP, TUBE (B8)	2	

GX160K1(SX7)	E-19 FLYWHEEL

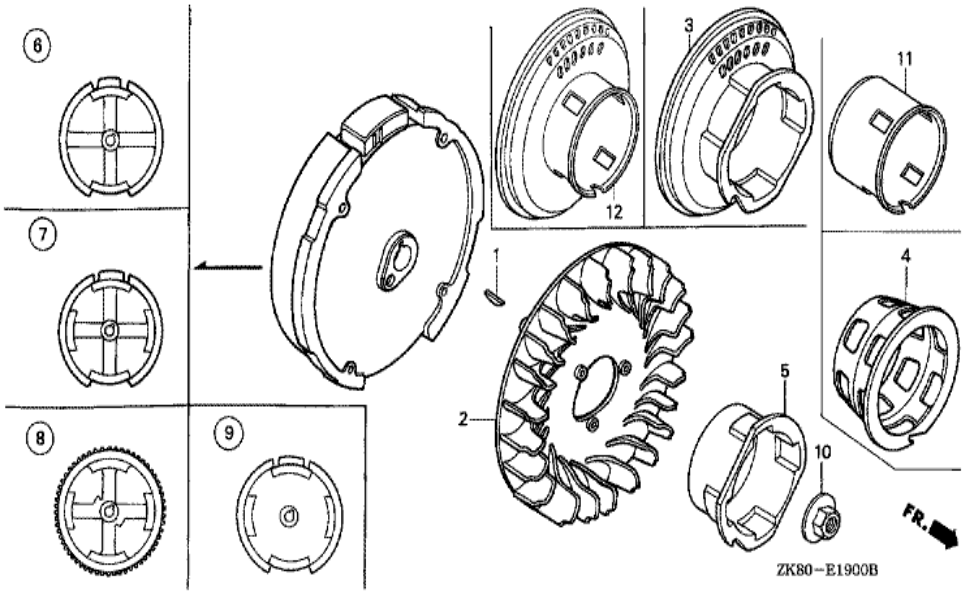

Ref	Partnumber	Description	GX160K1	Serial Numbers	
001	13331-357-000	KEY, SPECIAL WOODRUFF, 25X18	1		
002	19511-ZE1-000	FAN, COOLING	1		
005	28451-ZH8-003	PULLEY, STARTER	1		8805657
006	31100-ZE7-010	FLYWHEEL COMP. (STD.)	1		
010	90201-878-003	NUT, SPECIAL, 14MM	1		
011	28451-ZH8-801	PULLEY, STARTER	1	8805658	

GX160K1(SX7)	E-2 CYLINDER HEAD

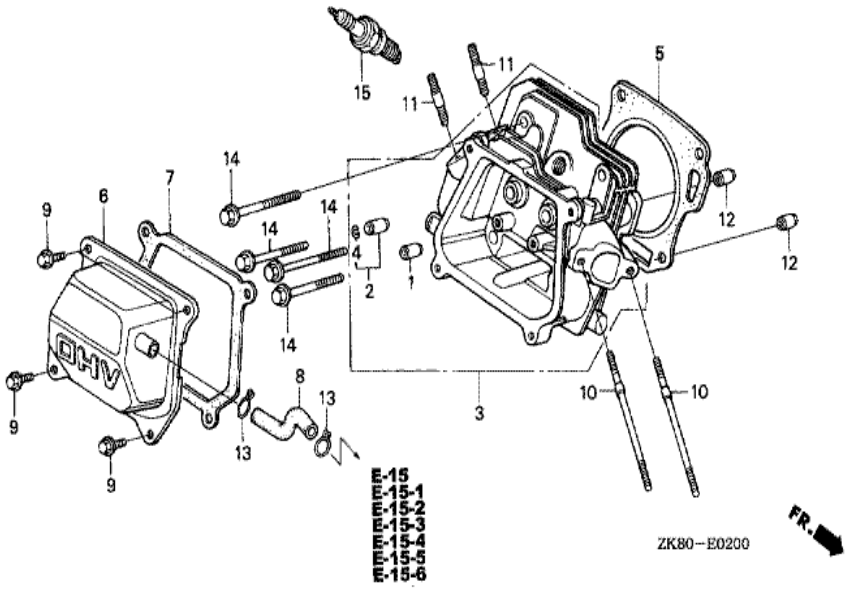

Ref	Partnumber	Description	GX160K1	Serial Numbers
001	12204-ZE1-306	GUIDE, IN. VALVE (OS)	(1)	
002	12205-ZE1-315	GUIDE, EX. VALVE (OS)	(1)	
003	12210-ZH8-405	HEAD COMP., CYLINDER	1	
004	12216-ZE5-300	CLIP, VALVE GUIDE	1	
005	12251-ZF1-800	GASKET, CYLINDER HEAD	1	
006	12310-ZE1-020	COVER COMP., HEAD	1	
007	12391-ZE1-000	PACKING, HEAD COVER	1	
008	15721-ZH8-000	TUBE, BREATHER	1	
009	90013-883-000	BOLT, FLANGE, 6X12 (CT200)	4	
010	90043-ZE1-020	BOLT, STUD, 6X112	2	
011	90047-ZE1-000	BOLT, STUD, 8X32	2	
012	94301-10160	DOWEL PIN, 10X16	2	
014	95723-0806000	BOLT, FLANGE, 8X60	4	
Ref	Partnumber	Description	GX160K1	Serial Numbers
015	98079-56846	PLUG, SPARK (BPR6ES) (NGK)	1	
015	98079-56855	PLUG, SPARK (W20EPR-U) (DENSO)	1	

GX160K1(SX7)	E-20 IGNITION COIL

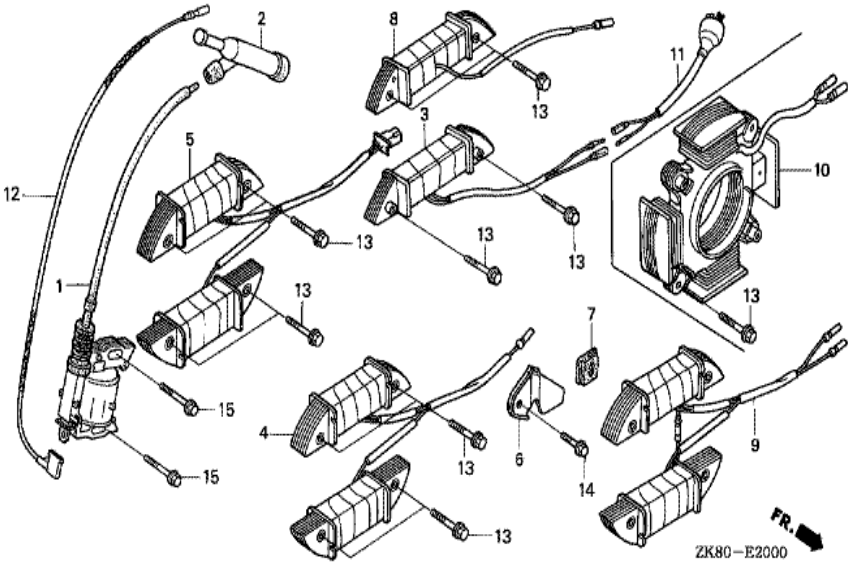

Ref	Partnumber	Description	GX160K1	Serial Numbers	
001	30500-ZE1-043	COIL ASSY., IGNITION	1		8954625
001	30500-ZE1-053	COIL ASSY., IGNITION	1	8954626	
002	30700-ZE1-013	CAP ASSY., NOISE SUPPRESSOR (NICHIWA Y-E	1		
012	36101-ZE1-010	CORD, STOP SWITCH (370MM)	1		
015	90121-952-000	BOLT, FLANGE, 6X25 (CT200)	2		

GX160K1(SX7)	E-22 CONTROL (1)

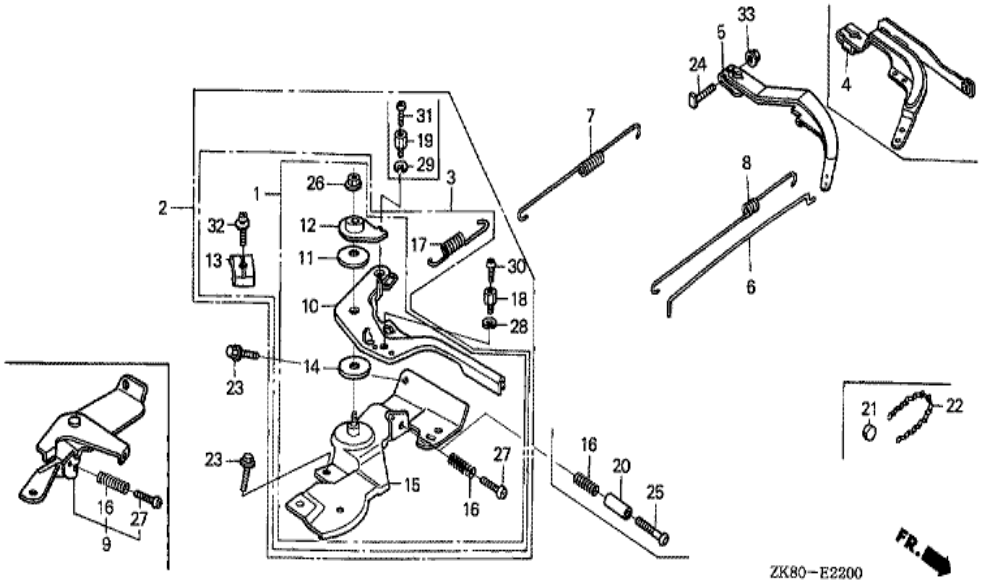

Ref	Partnumber	Description	GX160K1	Serial Numbers
003	16500-ZH8-823	CONTROL ASSY. (REMOTE)	1	
005	16551-ZE0-010	ARM, GOVERNOR	1	
006	16555-ZE1-000	ROD, GOVERNOR	1	
007	16561-ZE1-020	SPRING, GOVERNOR	1	
008	16562-ZE1-020	SPRING, THROTTLE RETURN	1	
010	16571-ZH8-020	LEVER, CONTROL	1	
011	16574-ZE1-000	SPRING, LEVER	1	
012	16575-ZH8-000	WASHER, CONTROL LEVER	1	
013	16576-891-000	HOLDER, CABLE	1	
014	16578-ZE1-000	SPACER, CONTROL LEVER	1	
015	16580-ZH8-813	BASE COMP., CONTROL (REMOTE)	1	
016	16584-883-300	SPRING, CONTROL ADJUSTING	1	
017	16592-ZE1-810	SPRING, CABLE RETURN	1	
Ref	Partnumber	Description	GX160K1	Serial Numbers
020	16599-ZG1-M10	COLLAR, STOPPER	(1)	
023	90013-883-000	BOLT, FLANGE, 6X12 (CT200)	2	
024	90015-ZE5-010	BOLT, GOVERNOR ARM	1	
025	90016-ZG9-N30	SCREW, RECESSED, 5X25	(1)	
026	90114-SA0-000	NUT, SELF-LOCK, 6MM	1	
027	93500-050250H	SCREW, PAN, 5X25	1	
032	93500-050160A	SCREW, PAN, 5X16	1	
033	94050-06000	NUT, FLANGE, 6MM	1	

GX160K1(SX7)	E-28 LABEL (1)

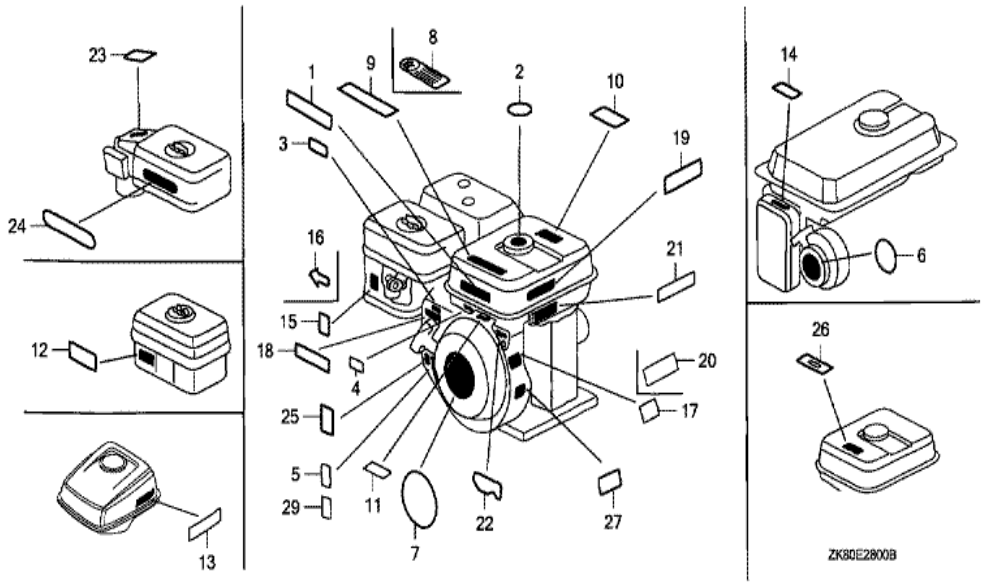

Ref	Partnumber	Description	GX160K1	Serial Numbers	
004	87135-ZE2-020	LABEL, E-SPEC (15.5X27.5)	1		8915696
007	87521-ZH8-030	EMBLEM (GX160 5.5)	1		
009	87522-ZH8-W41	MARK, CAUTION (PICTOGRAPH)	1		
015	87528-733-E90	MARK, CHOKE (H=36)	1		8759179
015	87528-733-E91	MARK, CHOKE (H=34)	1	8759180	
018	87532-ZH8-W40	MARK, THROTTLE INDICATION	1		

GX160K1(SX7)	E-3 CYLINDER BARREL

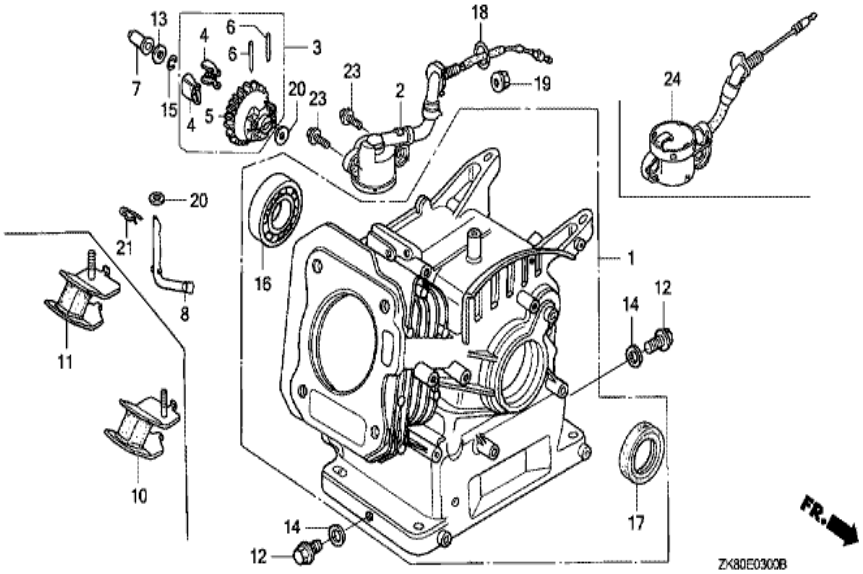

Ref	Partnumber	Description	GX160K1	Serial Numbers
001	12000-ZH8-426	BARREL ASSY., CYLINDER (OIL ALERT)	1	
002	15510-ZE1-033	SWITCH ASSY., OIL LEVEL	1	
003	16510-ZE1-000	GOVERNOR ASSY.	1	
004	16511-ZE1-000	WEIGHT, GOVERNOR	2	
005	16512-ZE1-000	HOLDER, GOVERNOR WEIGHT	1	
006	16513-ZE1-000	PIN, GOVERNOR WEIGHT	2	
007	16531-ZE1-000	SLIDER, GOVERNOR	1	
008	16541-ZE1-000	SHAFT, GOVERNOR ARM	1	
012	90131-ZE1-000	BOLT, DRAIN PLUG	2	
013	90451-ZE1-000	WASHER, THRUST, 6MM	1	
014	90601-ZE1-000	WASHER, DRAIN PLUG, 10.2MM	2	
015	90602-ZE1-000	CLIP, GOVERNOR HOLDER	1	
016	91001-ZF1-003	BEARING, RADIAL BALL (6205TMB) (NTN)	1	
Ref	Partnumber	Description	GX160K1	Serial Numbers
016	91001-ZF1-004	BEARING, RADIAL BALL (6205SH) (KOYO)	1	
017	91201-Z0T-801	OIL SEAL, 25X41X6 (NOK)	1	
018	91353-671-004	O-RING, 14MM (NOK)	1	
019	94050-10000	NUT, FLANGE, 10MM	1	
020	94101-06800	WASHER, PLAIN, 6MM	2	
021	94251-08000	PIN, LOCK, 8MM	1	
023	95701-0601200	BOLT, FLANGE, 6X12	2	

GX160K1(SX7)	E-6 CRANKCASE COVER (1)

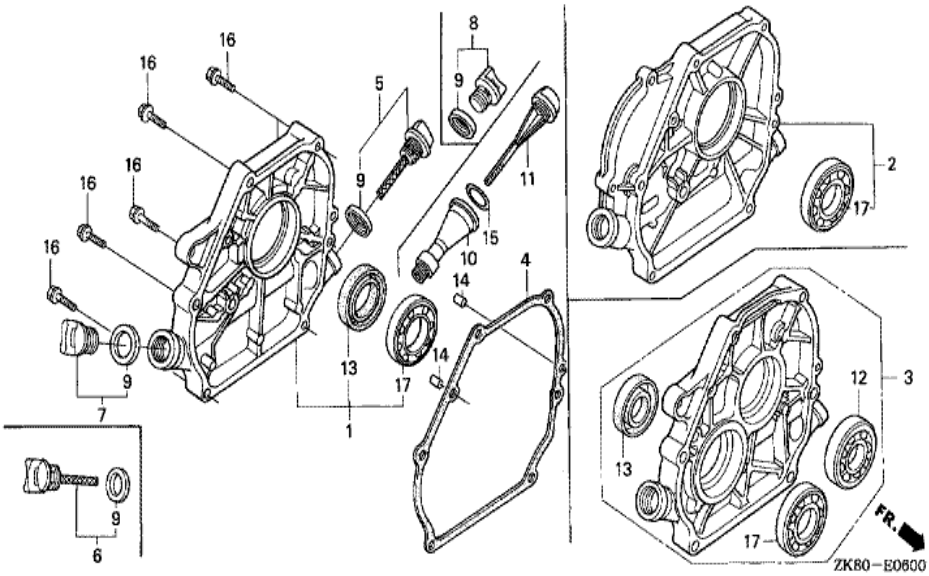

Ref	Partnumber	Description	GX160K1	Serial Numbers
001	11300-ZE1-634	COVER ASSY., CRANKCASE	1	
004	11381-ZH8-801	PACKING, CASE COVER (NON ASBESTOS)	1	
005	15600-ZE1-003	CAP ASSY., OIL FILLER (GRAY)	1	
007	15600-ZG4-003	CAP ASSY., OIL FILLER	1	
009	15625-ZE1-003	PACKING, OIL FILLER CAP	2	
013	91201-Z0T-801	OIL SEAL, 25X41X6 (NOK)	1	
014	94301-08140	DOWEL PIN, 8X14	2	
016	95701-0803200	BOLT, FLANGE, 8X32	6	
017	96100-6205000	BEARING, RADIAL BALL, 6205	1	

GX160K1(SX7)	E-7 CRANKSHAFT (1)

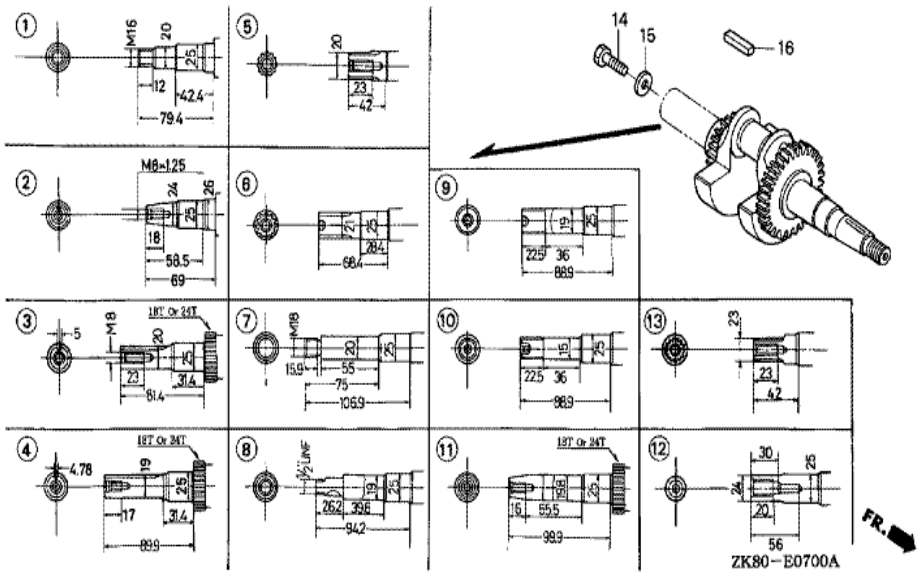

Ref	Partnumber	Description	GX160K1	Serial Numbers
003	13310-Z8K-000	CRANKSHAFT COMP. (18T)	1	
016	90741-883-810	KEY, 5X5X33 (YELLOW)	1	

GX160K1(SX7)	E-8 PISTON

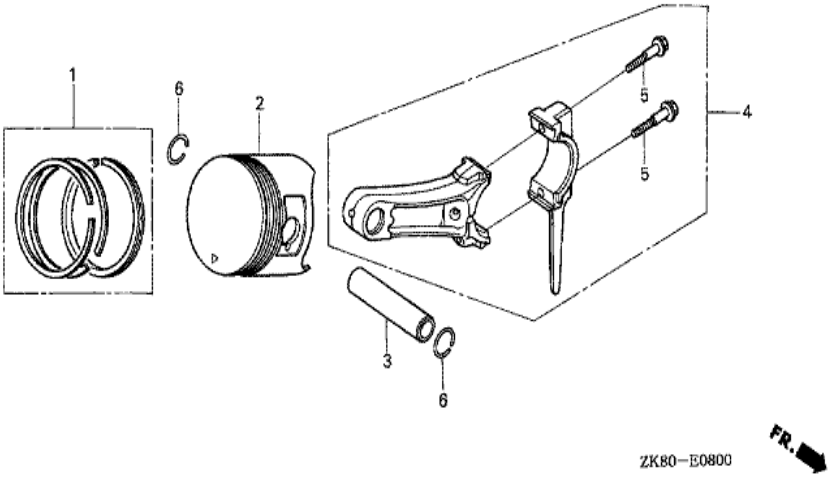

Ref	Partnumber	Description	GX160K1	Serial Numbers
001	13010-ZL0-003	RING SET, PISTON (STD.) (TEIKOKU)	1	
001	13010-ZL0-004	RING SET, PISTON (STD.) (NIPPON)	1	
001	13011-ZL0-003	RING SET, PISTON (0.25) (TEIKOKU)	(1)	
001	13011-ZL0-004	RING SET, PISTON (0.25) (NIPPON)	(1)	
001	13012-ZL0-003	RING SET, PISTON (0.50) (TEIKOKU)	(1)	
001	13012-ZL0-004	RING SET, PISTON (0.50) (NIPPON)	(1)	
001	13013-ZL0-003	RING SET, PISTON (0.75) (TEIKOKU)	(1)	
001	13013-ZL0-004	RING SET, PISTON (0.75) (NIPPON)	(1)	
002	13101-ZH8-010	PISTON (STD.)	1	
002	13102-ZH8-010	PISTON (0.25)	(1)	
002	13103-ZH8-010	PISTON (0.50)	(1)	
002	13104-ZH8-010	PISTON (0.75)	(1)	
003	13111-ZE1-000	PIN, PISTON	1	
Ref	Partnumber	Description	GX160K1	Serial Numbers
004	13200-ZE1-010	ROD ASSY., CONNECTING (STD.)	1	
004	132A0-ZE1-000	ROD ASSY., CONNECTING (0.25 UNDER SIZE)	(1)	
005	90001-ZE1-000	BOLT, CONNECTING ROD	2	
006	90551-ZE1-000	CLIP, PISTON PIN, 18MM	2	

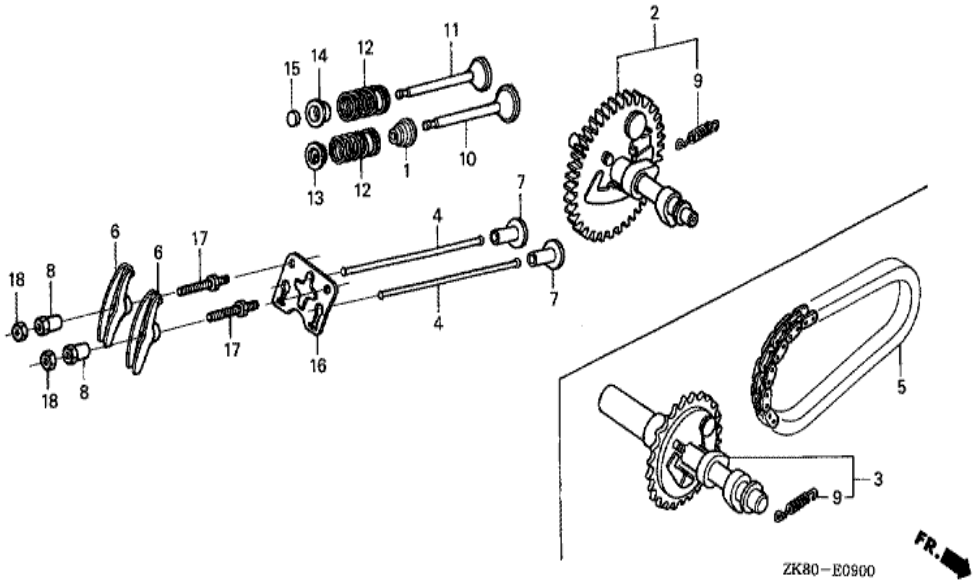

Ref	Partnumber	Description	GX160K1	Serial Numbers
001	12209-ZH8-003	SEAL, VALVE STEM	1	
002	14100-Z8K-870	CAMSHAFT ASSY.	1	
004	14410-ZE1-010	ROD, PUSH	2	
006	14431-ZE1-000	ARM, VALVE ROCKER	2	
007	14441-ZE1-010	LIFTER, VALVE	2	
008	14451-ZE1-013	PIVOT, ROCKER ARM	2	
009	14568-ZE1-000	SPRING, WEIGHT RETURN	1	
010	14711-ZF1-000	VALVE, IN.	1	
011	14721-ZF1-000	VALVE, EX.	1	
012	14751-ZF1-000	SPRING, VALVE	2	
013	14771-ZE1-000	RETAINER, IN. VALVE SPRING	1	
014	14773-ZE1-000	RETAINER, EX. VALVE SPRING	1	
015	14781-ZE1-000	ROTATOR, VALVE	1	
Ref	Partnumber	Description	GX160K1	Serial Numbers
016	14791-ZE1-010	PLATE, PUSH ROD GUIDE	1	
017	90012-ZE0-010	BOLT, PIVOT, 8MM	2	
018	90206-ZE1-000	NUT, PIVOT ADJUSTING	2	