metabo HPT

ELECTRIC TOOL PARTS LIST

■ CORDLESS GRINDER 2022 • 11 • 14

Model G 3612DVF (E1)

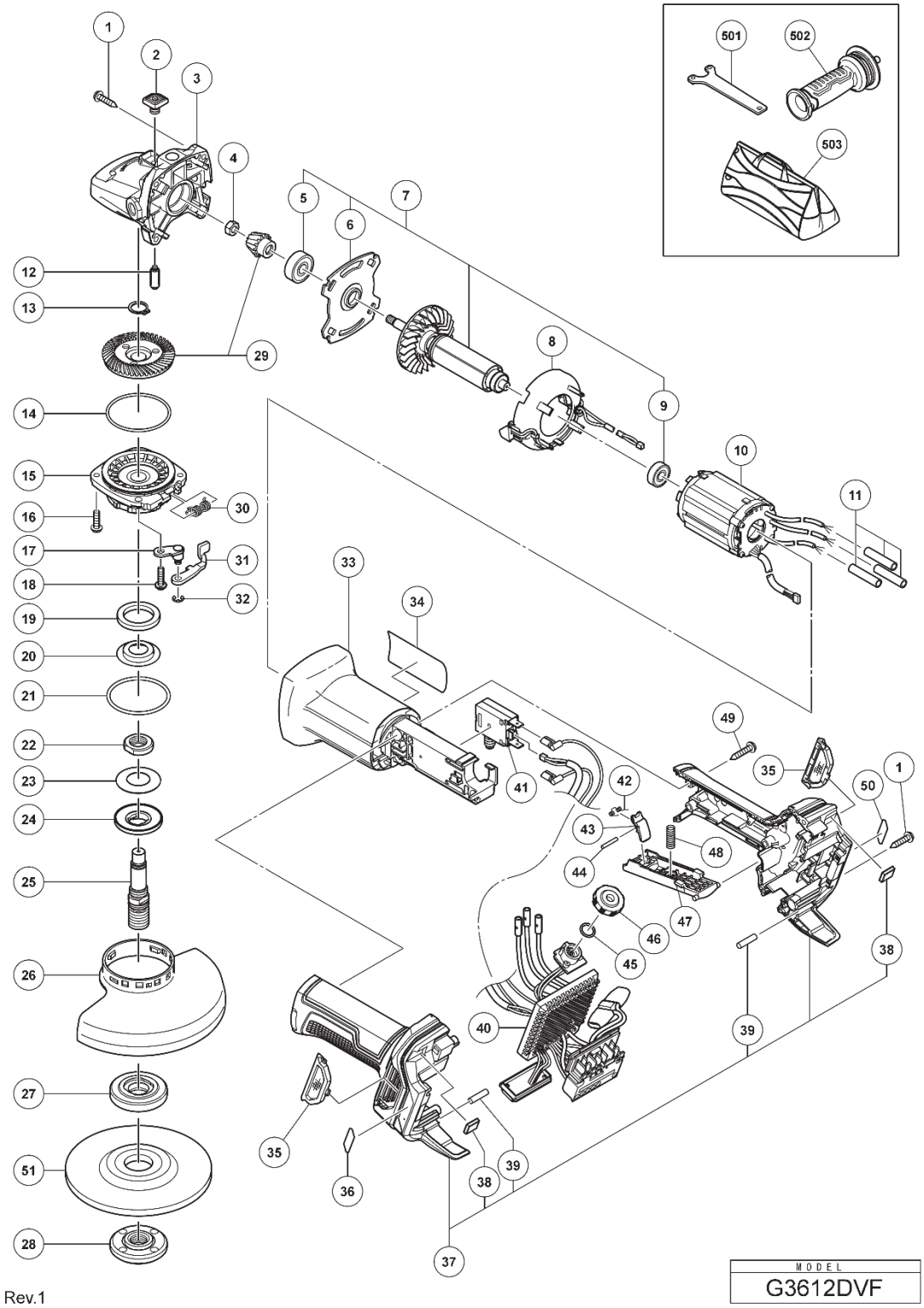

Rev.1

ITEM NO.	CODE NO.	DESCRIPTION	NO. USED	REMARKS
1	328643	TAPPING SCREW (W/FLANGE) D4X23 (BLACK)	6	
2	378809	PUSHING BUTTON	1	
3	379410	GEAR COVER ASS'Y	1	INCLUD.2.12
4	309191	SPECIAL NUT M6	1	
5	378615	BALL BEARING 628DD	1	
6	379413	BEARING HOLDER	1	
7	361198	ROTOR ASS'Y	1	INCLUD.5.6.9
8	379899	FAN GUIDE	1	
9	376128	BALL BEARING 607DD	1	
10	341140	STATOR SENSER PCB	1	
11	379901	SUMI TUBE	3	
12	301943	LOCK PIN	1	
13	939542	RETAINING RING FOR D12 SHAFT (10 PCS.)	1	
14	375899	O-RING	1	
15	378815	PACKING GLAND	1	
16	376226	SEAL LOCK SCREW (W/SP. WASHER) M4X14	3	
17	379733	LEVER HOLDER	1	
18	307046	SEAL LOCK SCREW (W/SP. WASHER) M5X16	1	
19	378822	FELT PACKING (B)	1	
20	379734	FRINGER	1	
21	375900	O-RING	1	
22	378821	SLEEVE	1	
23	371673	BELLEVILLE SPRING (B)	1	
24	371674	SUPPORT BODY (B)	1	
25	378820	SPINDLE (C)	1	
26	375903	WHEEL GUARD	1	
27	373071	WHEEL WASHER (E)	1	
28	937923P	WHEEL NUT 5/8"-11UNC	1	
29	379958	GEAR AND PINION SET	1	
30	376229	SPRING	1	
31	379736	LEVER	1	
32	6685336	RETAINING RING D4	1	
33	379401M	HOUSING (C)	1	
34		NAME PLATE	1	
35	379591	FILTER	2	
36	379349	MV LABEL (A) (2)	1	
37	379406	HANDLE ASS'Y	1	INCLUD.38.39
38	370321	DAMPER (A)	2	
39	373041	REAR BUMPER	2	
40	379906	CONTROLLER ASS'Y	1	INCLUD.41
41	379415	SWITCH	1	
42	337874	SPRING	1	
43	337873	LOCK LEVER	1	
44	339032	PIN	1	
45	987105	O-RING (S-10)	1	
46	376840	DIAL	1	
47	379420	PADDLE LEVER (B)	1	
48	379900	SPRING	1	
49	305490	TAPPING SCREW (W/FLANGE) D4X30 (BLACK)	3	
50	379350	MV LABEL (B) (2)	1	
51		RESINOID WHEEL (A) 115MM	1	

STANDARD ACCESSORIES

G3612DVF

ITEM NO.	CODE NO.	DESCRIPTION	NO. USED	REMARKS
501	938332Z	WRENCH	1	
502	336865	SIDE HANDLE	1	
503	328849M	BAG	1	