metabo HPT

GAS COMPRESSOR PARTS LIST

■ GAS AIR COMPRESSOR 2016 • 06 • 01
Model EC 2610E (E1)

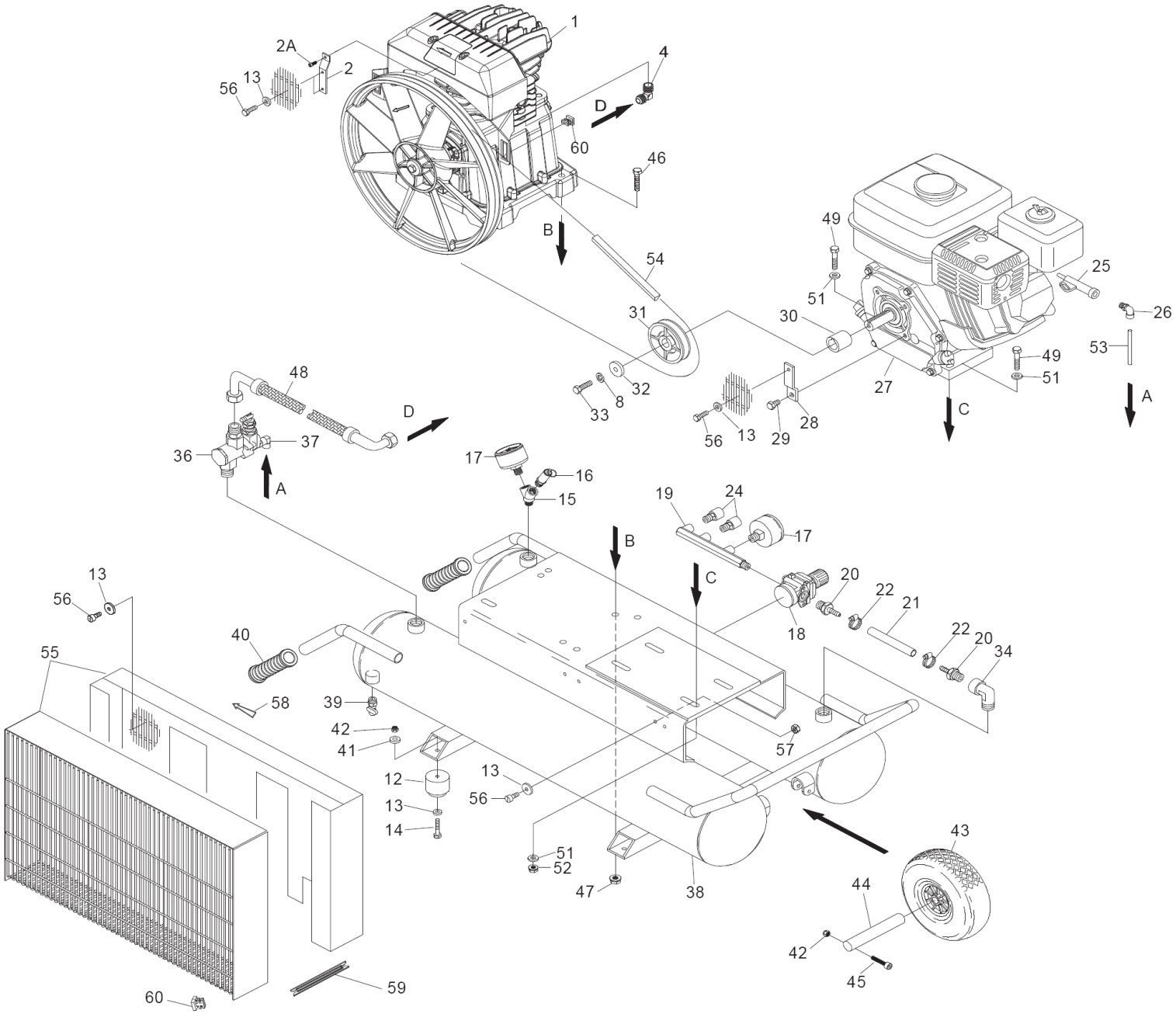

PARTS **EC2610E**

ITEM NO.	CODE NO.	DESCRIPTION	NO. USED	REMARKS
1	888839	Pump unit-black	1	9700003522
2	888840	Belt guard support	1	9700001463
2A	888841	Screw	1	9700001082
4	885450	Joint	1	7080160000
8	888842	Washer	1	9700010087
12	881684	Rubber	4	7360090000
13	881573	Washer	11	7030190000
14	881551	Screw	4	7011220000
15	885435	Joint	1	7082140000
16	881652	Safety valve	1	7192840000
17	888819	Pressure gauge	2	9700000412
18	885432	Pressure reducer	1	9100930140
19	885448	4 Way Manifold	1	9100710080
20	885449	Hose tail fitting	2	6003703808
21	885431	Rubber hose	1	6011300008
22	885433	Hose clamp	1	9100710090
24	885447	Joint	2	9100640020
25	885422	Pneumatic accelerator	2	9100710060
26	160598	Joint	1	7084240000
27	885442	Gasoline engine	1	7385090000
28	885440	Belt guard support	1	9100710020
29	884424	Screw	1	9700010111
30	885441	Spacer	1	9100710070
31	888843	Pulley	1	9700003577
32	885437	Washer	1	9700003071
33	885436	Screw	1	7011970000
34	881677	Joint	1	7080010000
36	885426	Auto unloading valve	1	9100930120
37	884433	Joint	1	7080780000
38	888844	Tank	1	9700003518
39	882610	Discharge Ball Valve	2	9700000750
40	881582	Handle	2	9100930130
41	887345	Washer	4	9700010186
42	881401	Self-locking Nut	6	7021010000
43	160616	Wheel	1	9700000381
44	885424	Pivot	1	9100710050
45	881551	Screw	2	9700010104
46	160608	Screw	4	7011180000
47	160611	Flange Nut	4	7020250000
48	888845	Infeed tube	1	9700003002
49	885434	Screw	4	7011310000
51	160612	Washer	8	7030120000
52	885557	Flange Nut	4	7020240000
53	887080	Risen tube	1	7230010000
54	888846	Belt (V-Belt, A44)	1	9700010072
55	888847	Belt guard kit	1	9700003517
56	888848	Screw	7	9700010187
57	888849	Nut	7	9700010112
58	888850	Plastic arrow	1	7361010000
59	888851	Belt guard spacer	1	7361020000
60	885427	Block for belt guard	8	7092010000

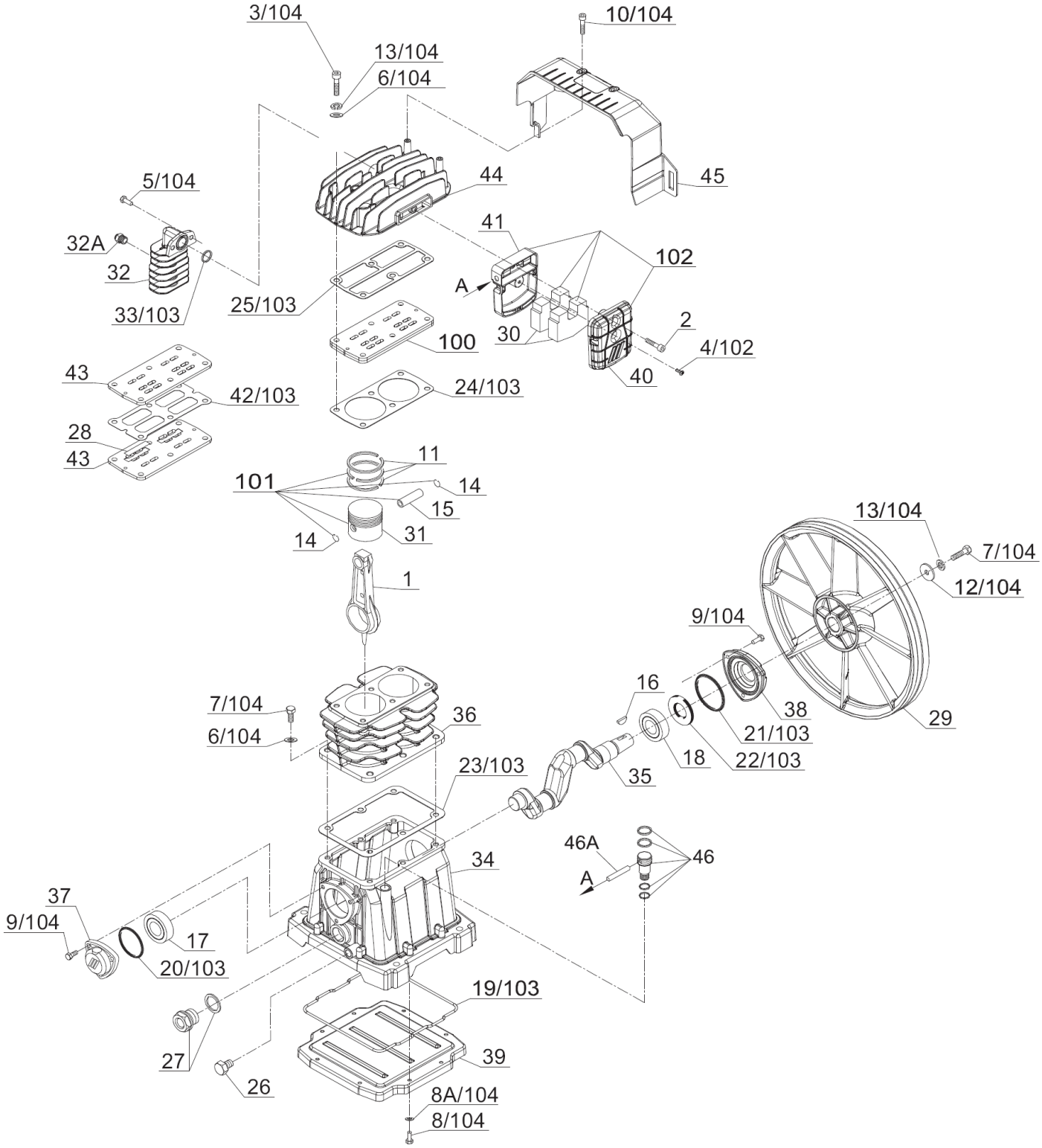
3/104
10/104
13/104
6/104
44
45
5/104
41
32A
102
32
A
25/103
33/103
2
30
100
4/102
40
43
42/103
24/103
28
43
11
101
14
15
31
14
13/104
7/104
1
12/104
9/104
16
7/104
36
38
6/104
21/103
29
18
22/103
23/103
35
46A
46
34
A
37
9/104
17
20/103
19/103
27
39
26
8A/104
8/104

ITEM NO.	CODE NO.	DESCRIPTION	NO. USED	REMARKS
1	888852	Connection Rod	2	9105450240
2	888853	Screw	1	9700002097
3	888854	Screw	6	9700002211
4	888855	Screw	1	9700002904
5	888856	Screw	2	9700010101
6	888857	Washer	12	9700001298
7	888858	Screw	7	9700001297
8	888859	Screw	8	9700000531
8A	888860	Washer	8	9701192003
9	888861	Screw	6	9700001296
10	887073	Screw	2	7012090000
11	888862	Piston rings kit	2	4080070000
12	888863	Washer	1	9700001300
13	888864	Washer	7	9700010087
14	888865	Ring	4	7041410000
15	888866	Piston pin	2	7050110000
16	888867	Key	1	7051510000
17	881466	Bearing	1	7060060000
18	888868	Bearing	1	7060150000
19	888869	O-ring	1	7070520000
20	888870	O-ring	1	9700001392
21	888871	O-ring	1	9700001393
22	888872	Oil seal	1	7071130000
23	888873	Gasket	1	7079790000
24	888874	Gasket	1	7079800000
25	888875	Gasket	1	7079820000
26	888876	Plug	1	9700002582
27	885470	Oil level sight glass	1	9700000408
28	888877	Valve	4	7198150000
29	888878	Flywheel	1	9700002920
30	888879	Filtering element	2	7210680000
31	888880	Piston	2	7220090000
32	888881	After cooler	1	9700002657
32A	160615	Start Valve	1	9100250080
33	888882	O-ring	1	9100270280
34	888883	Crankcase	1	9700002918
35	888884	Crankshaft	1	9105450250
36	888885	Cylinder	1	9105450060
37	888886	Front cover	1	9105450070
38	888887	Rear cover	1	9105450080
39	888888	Carter cover	1	9105450090
40	888889	Filter cover	1	9105450100
41	888890	Filter support	1	9700003515
42	888891	Gasket	1	9105450150
43	888892	Valve plate	2	9105450170
44	888893	Head	1	9700002919
45	888894	Air conveyor	1	7153140000
46	888895	Breather pipe plug kit	1	9700002725
46A	887080	Risen tube	1	7230010000

STANDARD ACCESSORIES

EC2610E

ITEM NO.	CODE NO.	DESCRIPTION	NO. USED	REMARKS

OPTIONAL ACCESSORIES

ITEM NO.	CODE NO.	DESCRIPTION	NO. USED	REMARKS
100	888896	Valve plate kit	1	4231260000
101	888897	Piston kit	1	9700002940
102	888898	Intake filter kit	1	9700003516
103	888899	Gasket kit	1	4081990000
104	888900	Screw kit	1	9700002939