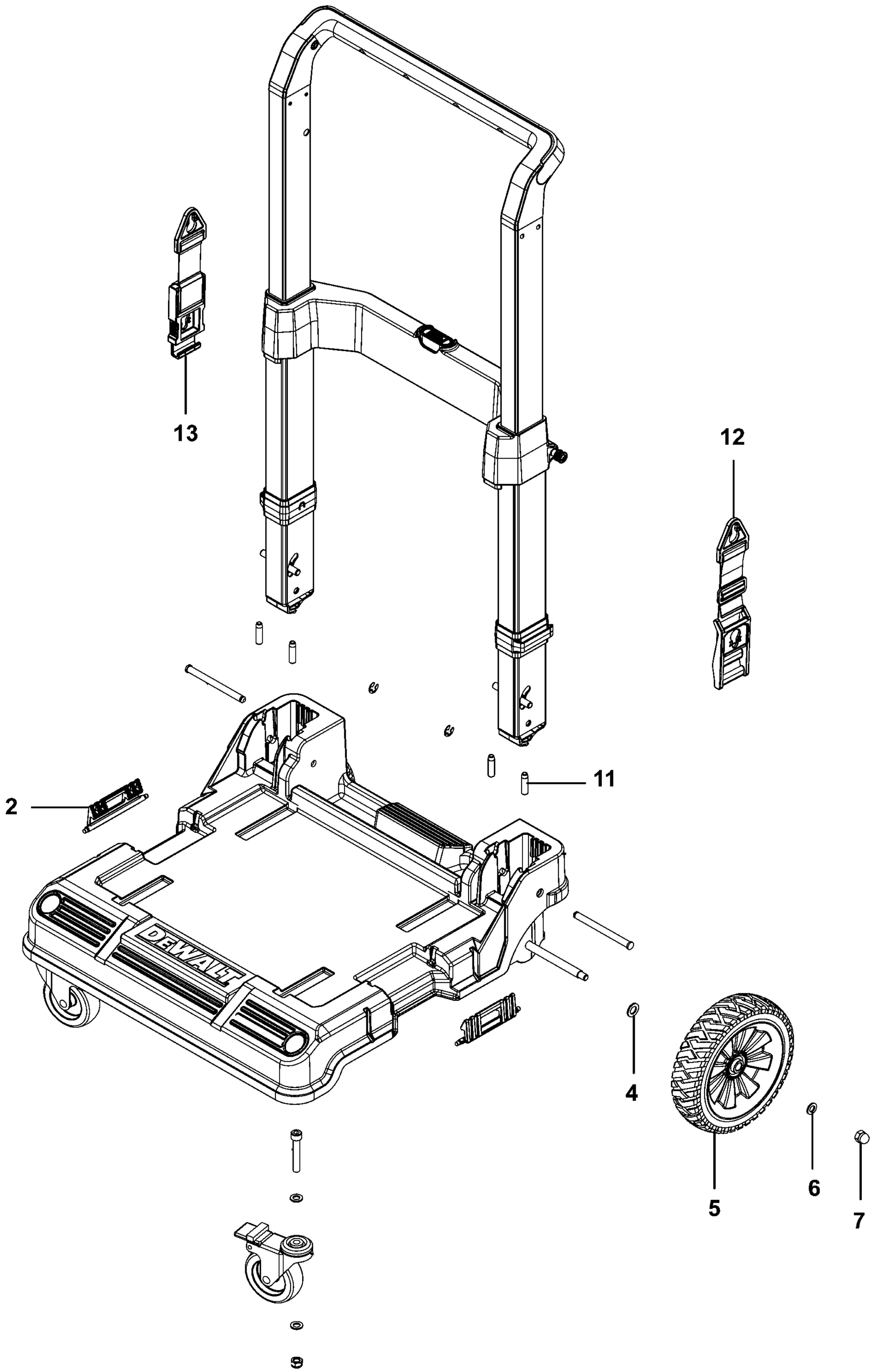
13
12
11
2
DEWALT
4
5
6
7

Part List

#2 - LATCH,Qty Req in Model: 1

Part #: N409477 **Description:** LATCH

#4 - WASHER,Qty Req in Model: 2

Part #: 330016-04 **Description:** WASHER

#5 - WHEEL,Qty Req in Model: 2

Part #: H2000047032**Description:** WHEEL

#6 - WASHER,Qty Req in Model: 6

Part #: 330016-03 **Description:** WASHER

#7 - LOCK NUT,Qty Req in Model: 2

Part #: P910575 **Description:** LOCK NUT

#11 - PIN,Qty Req in Model: 4

Part #: P910495 **Description:** PIN

#13 - STRAP. HOOKED,Qty Req in Model: 1

Part #: P2600508 **Description:** STRAP. HOOKED

#13 - STRAP. HOOKED,Qty Req in Model: 1

Part #: P2600508 **Description:** STRAP. HOOKED