Assembly Diagram for DS 14DV

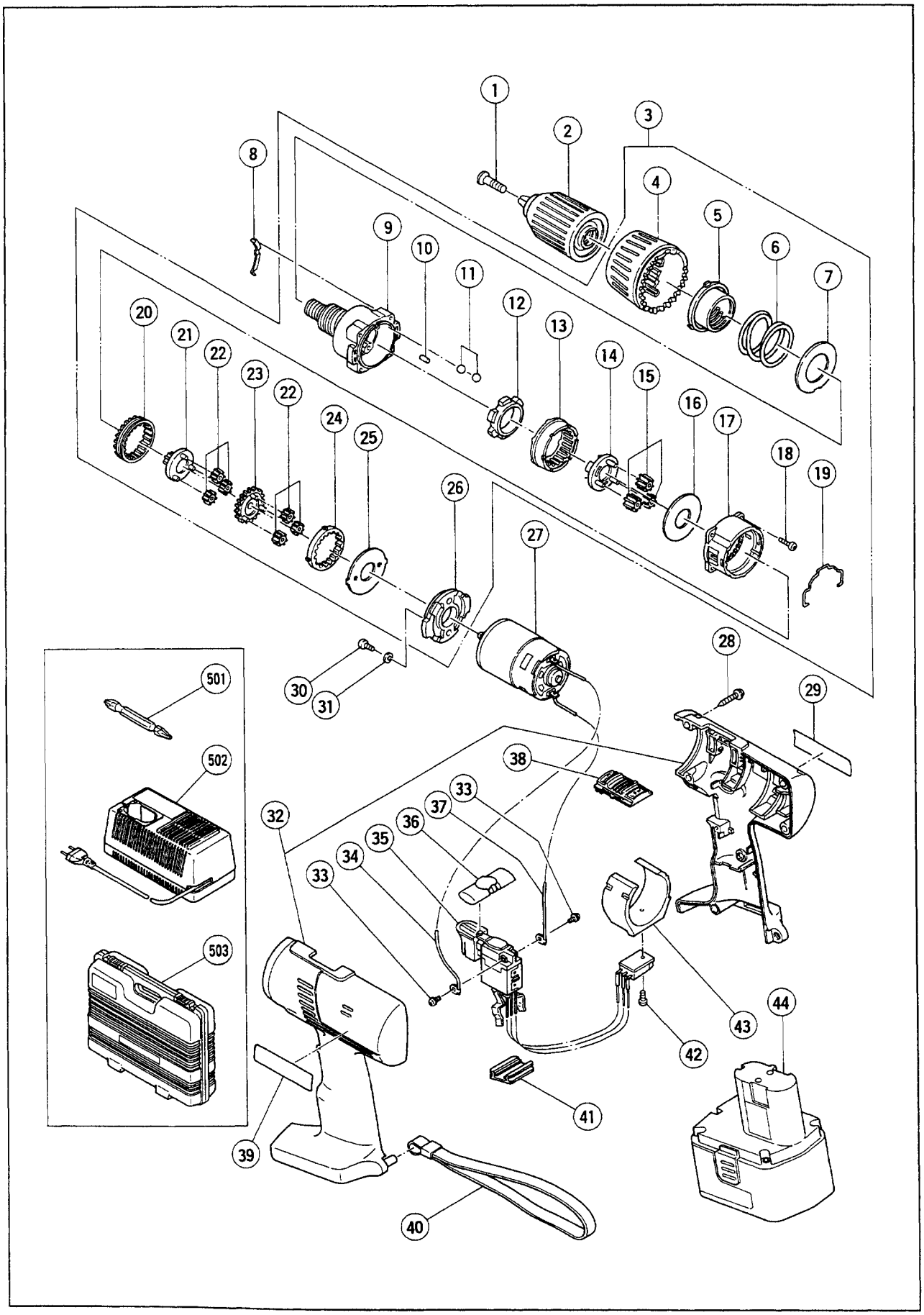

ITEM NO.	CODE NO.	DESCRIPTION	NO. USED	REMARKS	
1	311-959	SPECIAL SCREW (LEFT HAND) M6X23	1		
2	315-133	DRILL CHUCK 13VLRA – N	1		
3	315-135	GEAR BOX	1	INCLUD.4 – 7,9 – 26	
4	312-711	CAP	1		
5	312-710	NUT	1		
6	315-138	SPRING	1		
7	312-714	WASHER (D)	1		
8	312-713	CLICK SPRING	1		
9	312-696	FRONT CASE	1		
10	312-708	NEEDLE ROLLER (C) SET (6 PCS.)	1		
11	306-936	STEEL BALL	12		
12	312-707	LOCK RING	1		
13	312-715	RING GEAR	1		
14	312-706	CARRIER	1		
15	312-705	PLANET GEAR (C) SET (3 PCS.)	3		
16	312-704	WASHER (A)	1		
17	312-697	REAR CASE	1		
18	312-712	SCREW SET D3X12 (4 PCS.)	1		
19	311-962	SHIFT ARM	1		
20	315-137	SLIDE RING GEAR	1		
21	312-702	PINION (C)	1		
22	312-699	PLANET GEAR (A) SET (6 PCS.)	6		
23	312-701	PINION (B)	1		
24	315-136	FIRST RING GEAR	1		
25	312-716	WASHER (B)	1		
26	312-698	MOTOR SPACER	1		
27	315-139	MOTOR	1		
28	991-672	TAPPING SCREW (W/WASHER) D3X16	7		
29		NAME PLATE	1		
30	949-214	MACHINE SCREW M4X6 (10 PCS.)	2		
31	949-453	SPRING WASHER M4 (10 PCS.)	2		
32	315-144	HOUSING (A).(B) SET	1		
33	994-532	MACHINE SCREW (W/SP. WASHER) M3X5	2		
34	315-143	INTERNAL WIRE	1		
35	315-140	DC – SPEED CONTROL SWITCH	1		
36	306-151	PUSHING BUTTON	1		
37	315-142	INTERNAL WIRE	1		
38	311-961	SHIFT KNOB	1		
39		HITACHI LABEL	1		
40	306-952	STRAP	1		
41	315-141	TERMINAL SUPPORT (A)	1		
42	306-039	BIND SCREW M3X7	1		
43	311-965	FIN	1		
* 44	315-130	BATTERY EB 14B(W/ENGLISH N.P.)	1		
* 44	315-129	BATTERY EB 14B(W/ENGLISH N.P.)	1	FOR USA	

*: ALTERNATIVE PARTS

STANDARD ACCESSORIES

ITEM NO.	CODE NO.	DESCRIPTION	NO. USED	REMARKS	
501	983-006	+ DRIVER BIT NO.2 65L	1		
502		CHARGER(MODEL UC 14YF)	1		
503	315-134	CASE	1		

OPTIONAL ACCESSORIES

ITEM NO.	CODE NO.	DESCRIPTION	NO. USED	REMARKS	
601	955-657	− DRIVER BIT (A) 3MMX70L	1		
602	955-659	− DRIVER BIT (A) 4MMX70L	1		
603	955-674	− DRIVER BIT (A) 6MMX70L	1		
604	983-011	+ DRIVER BIT NO.3 65L	1		
605	983-004	+ DRIVER BIT NO.1 65L	1		
606	308-090	HOOK (FOR CORDLESS TOOLS)	1		
607	307-824	HOLSTER	1		

★: ALTERNATIVE PARTS

10 − 97 Printed in Japan
(971002 N)