Hitachi Power Tools

ELECTRIC TOOL PARTS LIST

■ MULTI TOOL — 2017 • 06 • 15

Model CV 350V — (E1a)

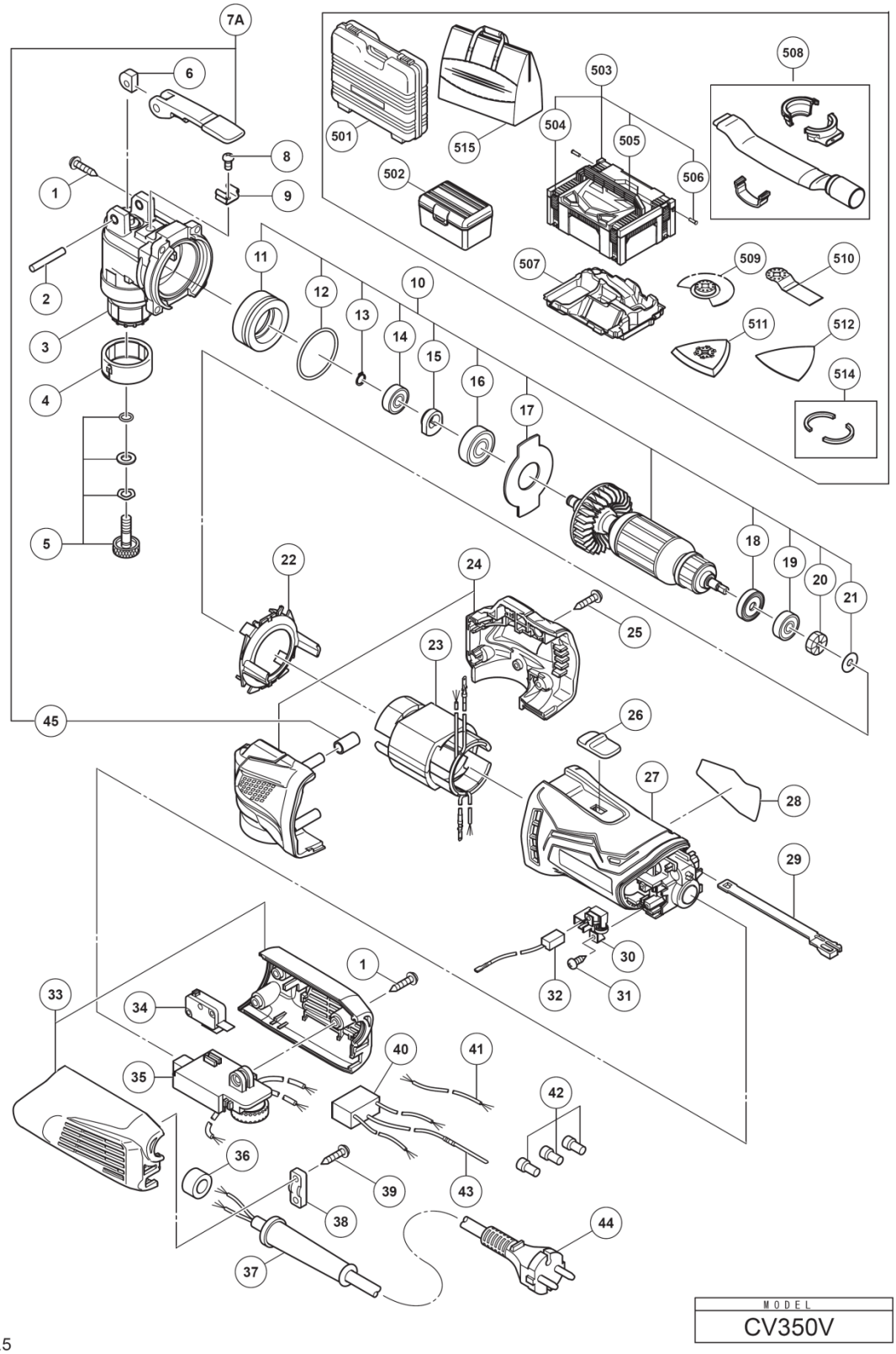

Rev.5

PARTS CV350V

ITEM NO.	CODE NO.	DESCRIPTION	NO. USED	REMARKS
1	301653	TAPPING SCREW (W/FLANGE) D4X20 (BLACK)	7	
2	337668	NEEDLE ROLLER	1	
3	337662	HEAD CASE	1	
4	337665	SLEEVE CAP	1	
5	337671	TOOL SHAFT	1	
6	337667	PUSHING PIECE	1	
7A	370673	LEVER SET	1	INCLUD.45
8	337670	SEAL LOCK SCREW M4X6	1	
9	337669	LEVER GUIDE	1	
*10	360984C	ARMATURE ASS'Y SET 110V-120V	1	INCLUD.11-21
11	337663	BEARING HOLDER	1	
12	337664	O-RING (S-35)	1	
13	994251	RETAINING RING FOR D7 SHAFT	1	
14	338037	BALL BEARING-R 607VV	1	
15	337675	BALANCER	1	
16	6000VV	BALL BEARING 6000VVCMPS2L	1	
17	337672	BEARING COVER	1	
18	321722	DUST SEAL	1	
19	626VVM	BALL BEARING 626VVC2PS2L	1	
20	337676	SENSOR MAGNET	1	
21	337677	PUSHING NUT	1	
22	337683	FAN GUIDE	1	
*23	340890C	STATOR 110V-120V	1	
24	337661	HEAD COVER (A).(B) SET	1	
25	313687	TAPPING SCREW (W/FLANGE) D3X16 (BLACK)	4	
26	337680	SLIDE KNOB	1	
27	337660	HOUSING	1	
28		NAME PLATE	1	
29	337679	SLIDE BAR	1	
30	333844	BRUSH HOLDER	2	
31	328210	TAPPING SCREW D3X8	4	
32	999005	CARBON BRUSH (1 PAIR)	2	
33	337678	TAIL COVER (A).(B) SET	1	
34	335460	MICRO SWITCH	1	
*35	371949	CONTROLLER 120V	1	
36	334379	FERRITE CORE	1	FOR EUROPE.AUS.NZL.SAF.RUS.
*37	953327	CORD ARMOR D8.8	1	
38	937631	CORD CLIP	1	
39	984750	TAPPING SCREW (W/FLANGE) D4X16	2	
*40	334472	NOISE SUPPRESSOR	1	FOR EUROPE.AUS.NZL.SAF.RUS.
41	338119	INTERNAL WIRE	1	
42	959140	CONNECTOR 50091 (10 PCS.)	3	
*43	314854	EARTH TERMINAL	1	FOR EUROPE.AUS.NZL.SAF.RUS.
*44	500240Z	CORD	1	(CORD ARMOR D8.8) FOR USA.CAN
45	370674	SLEEVE	1	

STANDARD ACCESSORIES

CV350V

ITEM NO.	CODE NO.	DESCRIPTION	NO. USED	REMARKS
501	337684	CASE	1	
502	337685	TOOL BOX	1	
503	336471	CASE ASS'Y (STACKABLE 2)	1	INCLUD.504-506
504	336472	LATCH	4	
505	336473	HANDLE	1	
506	336474	HINGE	2	
507	337937	INNER TRAY	1	
508	337922	DUST COLLECTION ADAPTER SET	1	INCLUD.45 FOR NOR.SWE.DEN.FIN
*509	335868	MULTI TOOL BLADE (MW85S)	1	
*510	335871	MULTI TOOL BLADE (MW32P)	2	FOR USA.CAN
511	335903	MULTI TOOL PAD (MU93D)	1	
*512	338252	SANDING PAPERS 94X94 AA60 (10 PCS.)	9	FOR USA.CAN
*512	338255	SANDING PAPERS 94X94 AA120 (10 PCS.)	9	FOR USA.CAN
*512	338258	SANDING PAPERS 94X94 AA240 (10 PCS.)	9	FOR USA.CAN
514	370534	FELT PACKING (10 PCS.)	2	
515	371950	BAG	1	FOR USA.CAN

OPTIONAL ACCESSORIES

ITEM NO.	CODE NO.	DESCRIPTION	NO. USED	REMARKS