18V CTR HANDLE DRILL
CTH1802K2

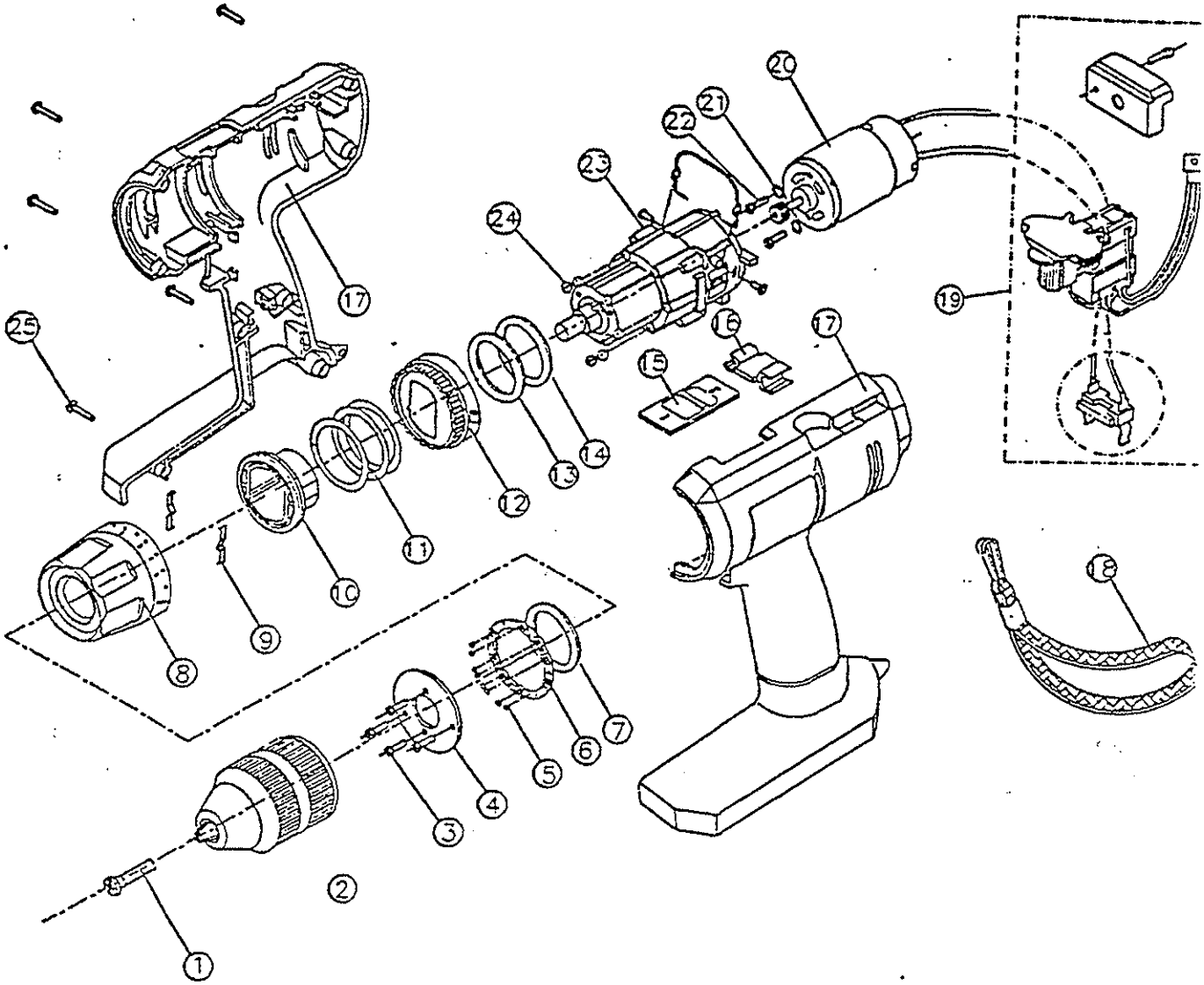

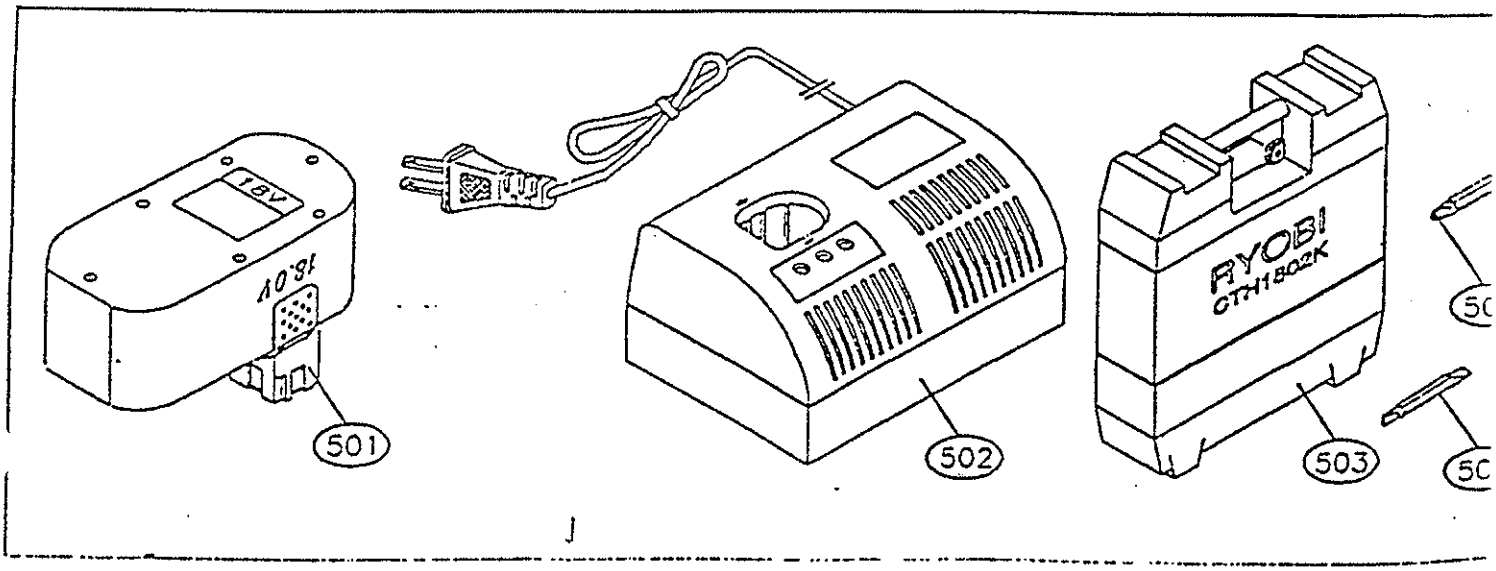

PARTS LIST FOR AFTER SALES SERVICE
MODEL CTH1802K2

REF	PART NO.	DESCRIPTION	QTY	REF	PART NO.	DESCRIPTION	QTY
	4130272	SCREW M5X0.8X26MM	1			STANDARD ACCESSORIES	
2	4130271	CHUCK	1	501	1400672	BATTERY PACK-CTH1802K2	2
3	1130302	SCREW M3X14	4	502	1400677	UNIVERSAL CHARGER	1
4	4900094	MOUNTING PLATE	1	503	4770009	CARRYING CASE	1
5	1290021	STEEL BALL 3MM	8	504	4240023	DOUBLE BIT PH #2/SLOT#6	1
6	4190002	BALL HOLDER, PLASTIC	1	505	4240022	DOUBLE BIT PH #3/SLOT#7	1
7	4900095	WASHER	1				
8	4900100	CLUTCH CAP	1		1980014	OPERATOR'S MANUAL	1
9	4180026	SPRING PLATE	2				
10	4900097	PLASTIC SLEEVE	1				
11	4180027	TORQUE SPRING	1				
12	4360005	LOCATION CUP, PLASTIC	1				
13	4900099	CLUTCH WASHER	1				
14	1900149	WASHER	1				
15	4360008	HOUSING LEVER	1				
16	1360077	PLASTIC BIT HOLDER	1				
17	4800036	HOUSING	1				
17-1	4910035	BRAND LABEL	1				
17-2	4910036	RATING LABEL	1				
18	1080066	LANYARD	1				
19	4550039	SWITCH ASSY	1				
20	4030017	MOTOR ASSY	1				
[illegible]	1900015	SPRING WASHER	2				
22	1130047	SCREW M4X10MM	2				
23	4050009	2-SPEED GEAR BOX	1				
24	1290002	BALLDIA 5MM	12				
25	1130304	SCREW M3X5X16MM	8				

SERVICE NOTES