metabo HPT

ELECTRIC TOOL PARTS LIST

■ CORDLESS RECIPROCATING SAW 2021 • 05 • 27

Model CR 18DA (E1)

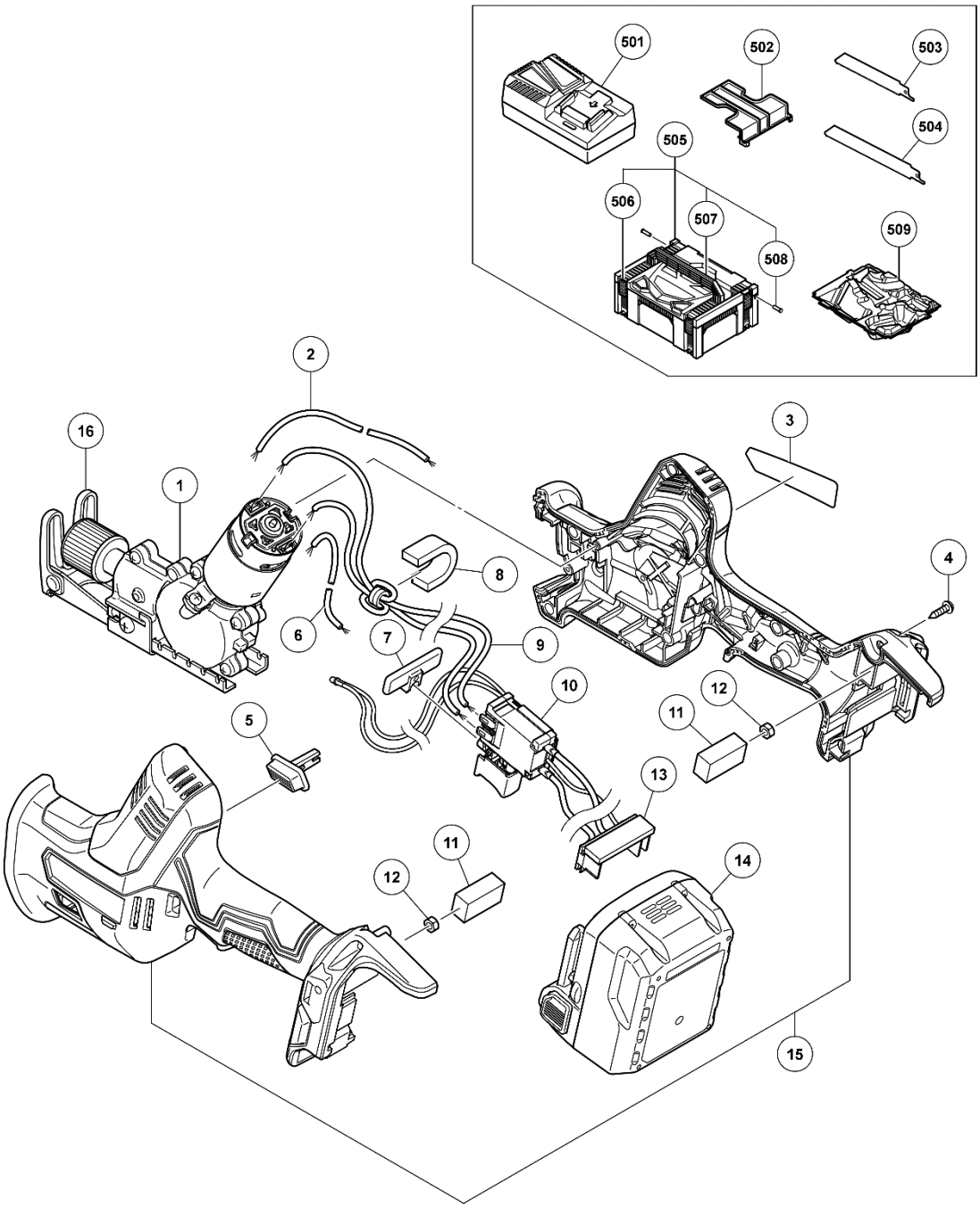

MODEL
CR18DA

Rev.3
30.10.2020

PARTS

CR18DA

ITEM NO.	CODE NO.	DESCRIPTION	NO. USED	REMARKS
1	376379	GEAR BOX	1	INCLUD.16
**2	376553	INTERNAL WIRE (BLACK) L110	1	FOR CHN.UAE.THA.SIN.MAL.IND.USA.CAN
3		LABEL	1	
4	313687	TAPPING SCREW (W/FLANGE) D3X16 (BLACK)	9	
5	376377	LOCKING KNOB	1	
**6	376552	INTERNAL WIRE (RED) L105	1	FOR CHN.UAE.THA.SIN.MAL.IND.USA.CAN
7	329548	PUSHING BUTTON (A)	1	
10	376380	DC-SPEED CONTROL SWITCH	1	
11	328644	PACKING	2	
12	327002	LOCK NUT M4 (BLACK)	2	
13	331399	BATTERY TERMINAL	1	
**15	376378M	HOUSING (A).(B) SET	1	FOR USA.CAN
16	376751	BASE	1	

STANDARD ACCESSORIES

CR18DA

ITEM NO.	CODE NO.	DESCRIPTION	NO. USED	REMARKS
503	958185	SABER SAW BLADES NO.5 (5 PCS.)	1	
504	318617	SABER SAW BLADES NO.107 150L P.24 (5 PCS	1	

OPTIONAL ACCESSORIES

ITEM NO.	CODE NO.	DESCRIPTION	NO. USED	REMARKS
601	959611	SABER SAW BLADES NO.4 (5 PCS.)	1	
602	318611	SABER SAW BLADES NO.101 150L P.10 (5 PCS	1	
603	318612	SABER SAW BLADES NO.102 228L P.10 (5 PCS	1	
604	318613	SABER SAW BLADES NO.103 150L P.14 (5 PCS	1	
605	318614	SABER SAW BLADES NO.104 228L P.14 (5 PCS	1	
606	318618	SABER SAW BLADES NO.108 228L P.24 (5 PCS	1	
607	324818	SABER SAW BLADES NO.109 150L P.18 (5 PCS	1	
608	324819	SABER SAW BLADES NO.110 228L P.18 (5 PCS	1	
609	318619	SABER SAW BLADES NO.121 305L P.6 (5 PCS.	1	
610	318620	SABER SAW BLADES NO.131 305L P.10/14(5PC	1	
611	318621	SABER SAW BLADES NO.132 203L (5 PCS.)	1	
612	370683	CURVED BLADES NO.141(S)150L P.14(3 PCS.)	1	
613	370684	CURVED BLADES NO.142(S)200L P.14(3 PCS.)	1	
614	370685	CURVED BLADES NO.143(S)250L P.14(3 PCS.)	1	
615	371902	CURVED BLADES NO.158 200L P.8 (3 PCS.)	1	