Chicago Pneumatic

# CP7711/CP7721 Series

## Model C

### Impact Wrench

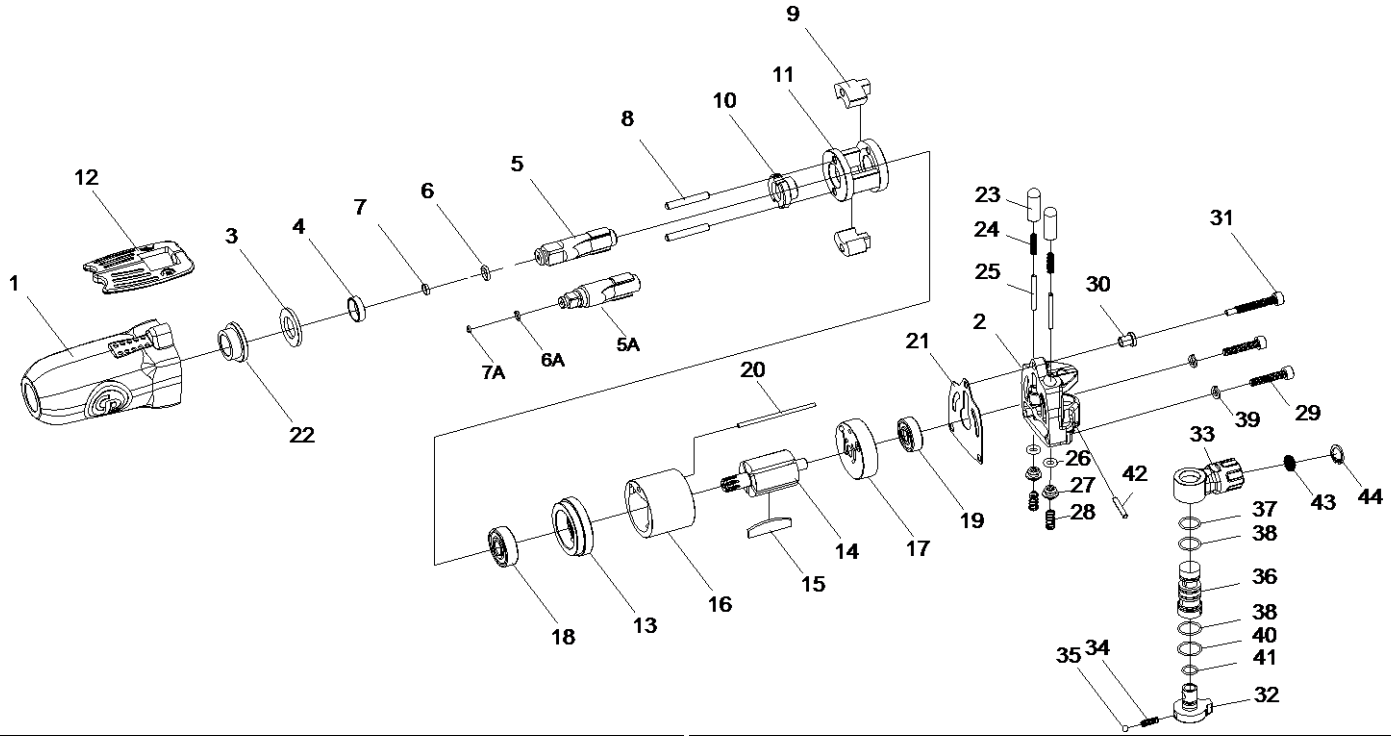


| Index No. | Part No. | Description | Qty. |
|---|---|---|---|
| 8 | **8950240538** | Hammer Pin Kit (2) | 1 |
| 9 | **8950240539** | Hammer Kit(2) | 1 |
| 10 | **8940173222** | Cam | 1 |
| 11 | **8940173223** | Hammer Cage | 1 |
| 14 | **8940173226** | Rotor | 1 |
| 15 | **8950221519** | Rotor Blade Set(5) | 1 |
| 16 | **8940173228** | Cylinder | 1 |
| **A** | **8940173429** | **Housing Kit** | |
| 1 | | Housing | 1 |
| 22 | | Bushing | 1 |
| **B** | **8950240535** | **Spacer Kit** | |
| 3 | | Washer | 1 |
| 4 | | Bushing | 1 |
| **C** | **8950000150** | **Bearing Kit** | |
| 18 | | Ball Bearing | 1 |
| 19 | | Ball Bearing | 1 |
| **D1** | **8950240536** | **Anvil Kit 1/4"** | |
| 5A | | Anvil 1/4" | 1 |
| 6A | | O-Ring | 1 |
| 7A | | Anvil Collar 1/4" | 1 |
| **D2** | **8950240537** | **Anvil Kit 3/8"** | |
| 5 | | Anvil 3/8" | 1 |
| 6 | | O-Ring | 1 |
| 7 | | Anvil Collar 3/8" | 1 |
| **E1** | **8950251300** | **Anvil Collar Kit 1/4"** | |
| 6A | | O-Ring | 5 |
| 7A | | Anvil Collar 1/4" | 5 |
| **E2** | **8950251301** | **Anvil Collar Kit 3/8"** | |
| 6 | | O-Ring | 5 |
| 7 | | Anvil Collar 3/8" | 5 |
| **F** | **8950221518** | **End Plate Kit** | |
| 13 | | End Plate | 1 |
| 18 | | Ball Bearing | 1 |
| **G** | **8950221520** | **End Plate Kit** | |
| 17 | | End Plate | 1 |
| 19 | | Ball Bearing | 1 |
| **H** | **8950212245** | **Valve Kit** | |
| 23 | | Valve Stem | 2 |
| 24 | | Spring | 2 |
| 25 | | Pin | 2 |
| 26 | | O-Ring | 2 |
| 27 | | Throttle Valve | 2 |
| 28 | | Spring | 2 |
| **J** | **8950212246** | **Trigger Kit** | |
| 12 | | Throttle Lever | 1 |
| 30 | | Bushing | 1 |
| 31 | | Screw | 1 |

| Index No. | Part No. | Description | Qty. |
|---|---|---|---|
| **K** | **8950212244** | **Inlet Kit** | |
| 32 | | Regulator Knob | 1 |
| 33 | | Air Inlet | 1 |
| 34 | | Spring | 1 |
| 35 | | Steel Ball | 1 |
| 36 | | Valve Bushing | 1 |
| 37 | | O-Ring | 1 |
| 38 | | O-Ring | 2 |
| 40 | | O-Ring | 1 |
| 41 | | O-Ring | 1 |
| 42 | | Spring Pin | 1 |
| 43 | | Screen | 1 |
| 44 | | Retaining Ring | 1 |
| **L** | **8940173430** | **Backhead Kit** | |
| 2 | | Backhead | 1 |
| 21 | | Gasket | 1 |
| 23 | | Valve Stem | 2 |
| 24 | | Spring | 2 |
| 25 | | Pin | 2 |
| 26 | | O-Ring | 2 |
| 27 | | Throttle Valve | 2 |
| 28 | | Spring | 2 |
| 29 | | Screw | 2 |
| 30 | | Bushing | 1 |
| 31 | | Screw | 1 |
| 32 | | Regulator Knob | 1 |
| 33 | | Air Inlet | 1 |
| 34 | | Spring | 1 |
| 35 | | Steel Ball | 1 |
| 36 | | Valve Bushing | 1 |
| 37 | | O-Ring | 1 |
| 38 | | O-Ring | 2 |
| 39 | | Spring Washer | 2 |
| 40 | | O-Ring | 1 |
| 41 | | O-Ring | 1 |
| 42 | | Spring Pin | 1 |
| 43 | | Screen | 1 |
| 44 | | Retaining Ring | 1 |
| **SP** | **8950280069** | **Small Part Kit** | |
| | **include 20,29(2),30,31,34,35,39(2),42,43,44** | | |
| **TK** | **8940173515** | **Tune-up Kit** | |
| | **include 15,21,26(2),37,38(2),40,41** | | |

| | | | |
|---|---|---|---|
| | 6159948710 | Safety instruction | 1 |
| | 8940173260 | Operator's manual | 1 |
| | 8950900061 | Warning Label | 1 |

Spare parts without part number are not sold separately - High wear parts underlined

**Contact us at www.cp.com**