CN890II
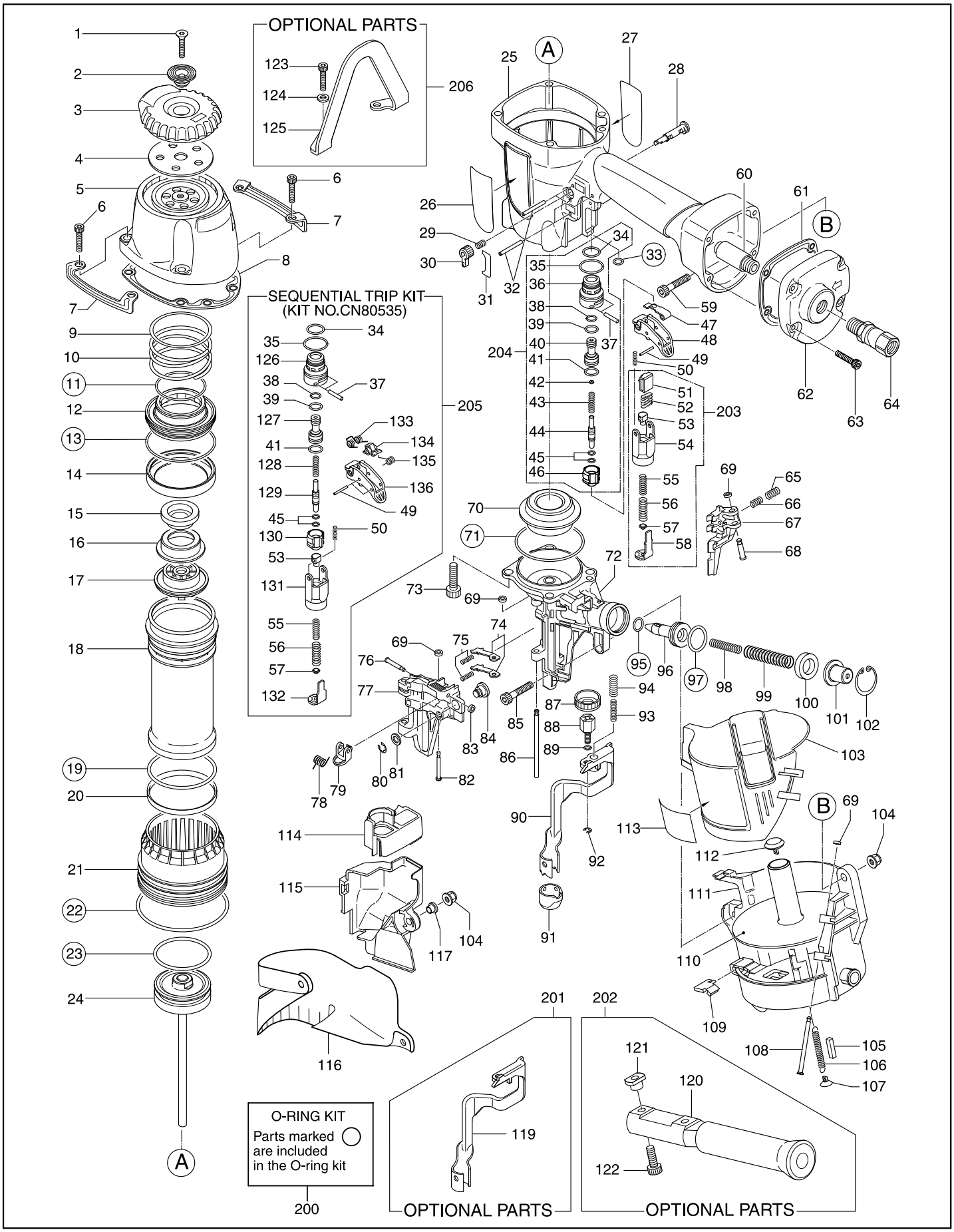
FRAMING COIL NAILER