CMP21PL

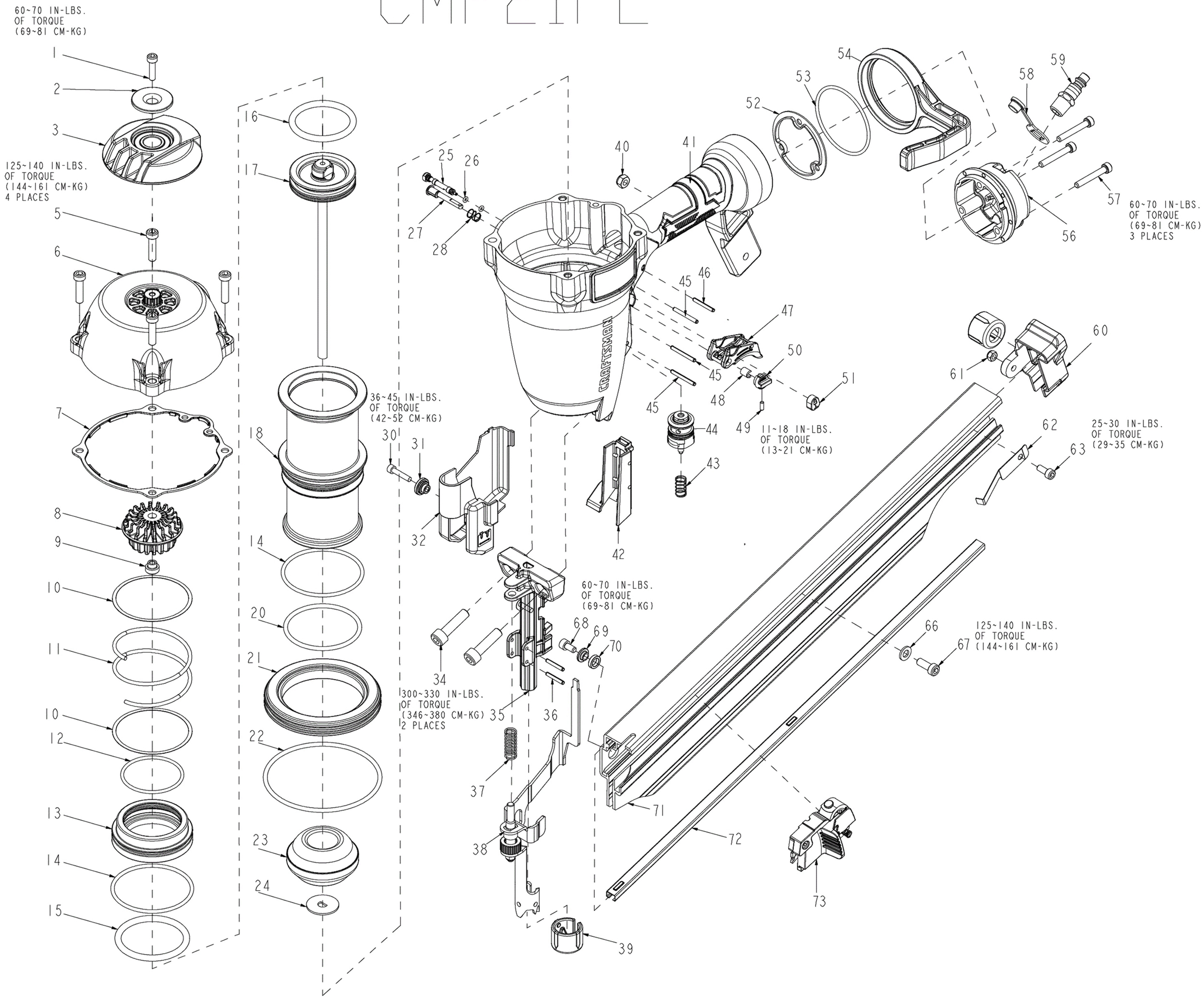

IP1526-1RA 08/18

TO BE USED WITH PARTS LIST IP1526-2 AND OPERATION AND MAINTENANCE MANUAL N638272