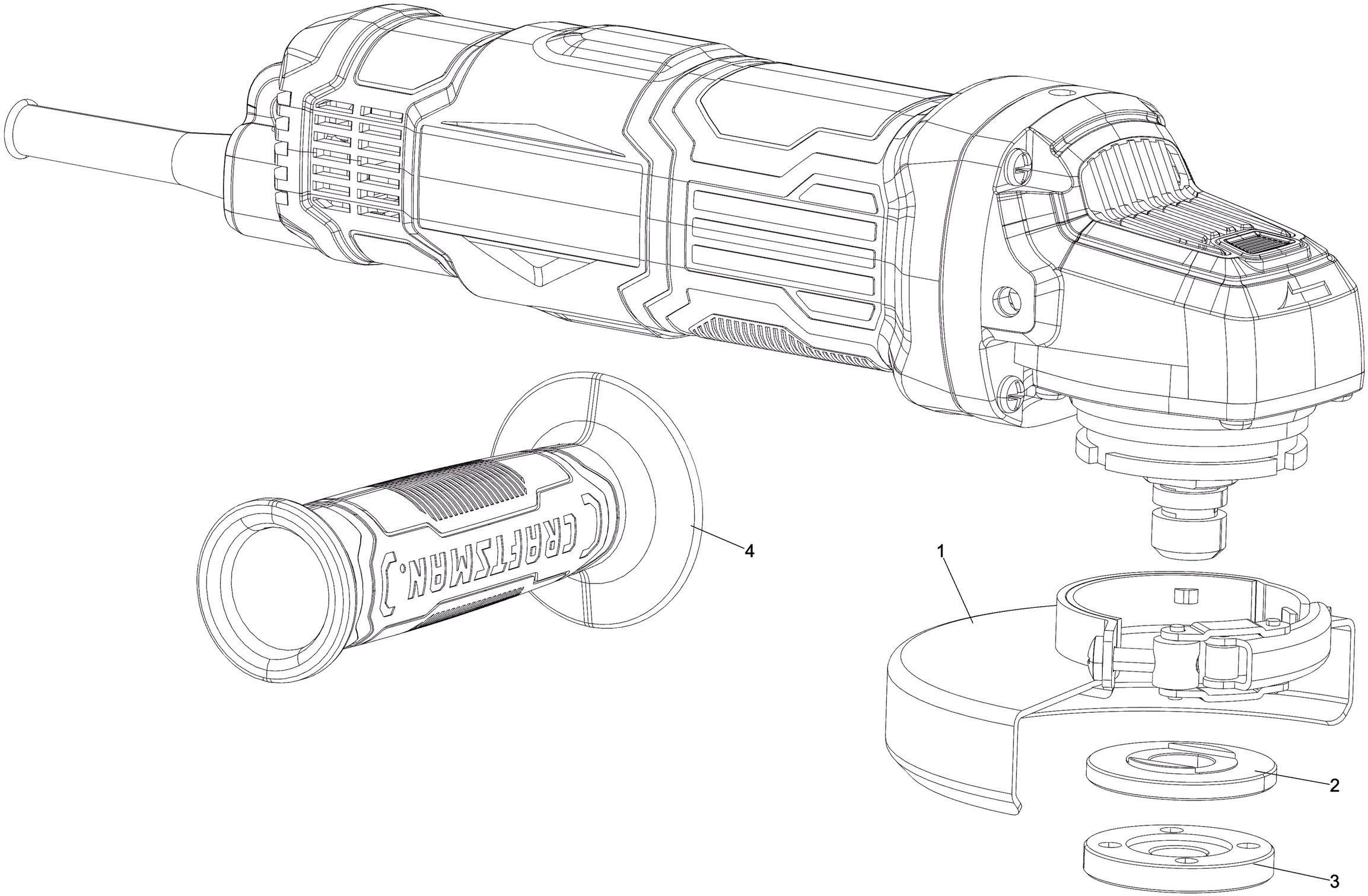
CRAFTSMAN
4
1
2
3