metabo HPT

LIST NO. K819

ELECTRIC TOOL PARTS LIST

■ CORDLESS SHEAR

2016·1·20

Model CE 18DSL

(E1)

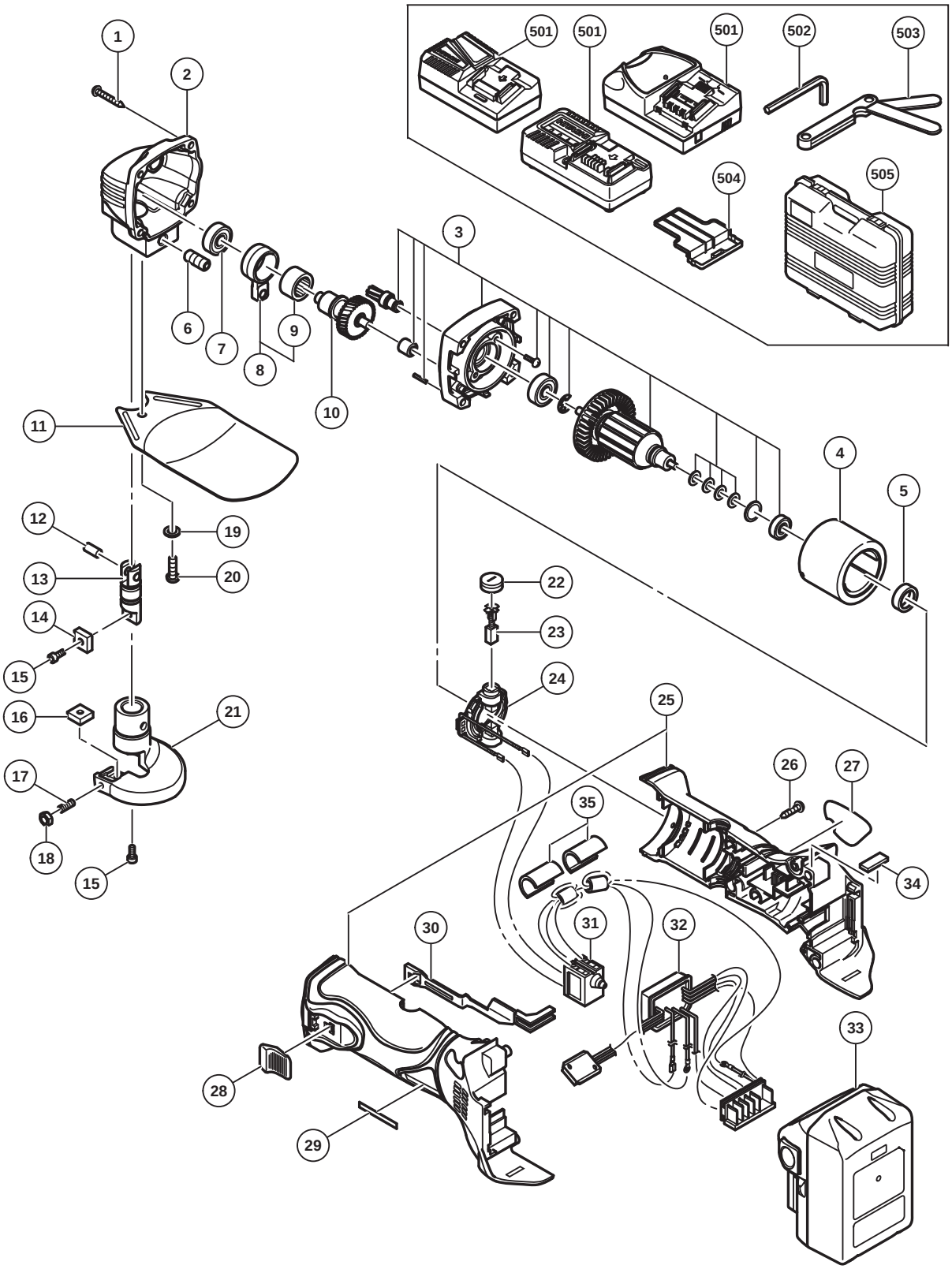

	ITEM NO.	CODE NO.	DESCRIPTION	NO. USED	REMARKS	
	1	303694	TAPPING SCREW (W/FLANGE) D4 X 35 (BLACK)	4		
	2	339994	GEAR COVER	1		
	3	339998	ARMATURE AND PINION SET	1		
	4	328195	MAGNET	1		
	5	338867	BUSHING	1		
	6	998008	HEX. SOCKET SET SCREW M8 X 20	1		
	7	333945	BALL BEARING 608VV	1		
	8	998004	CONNECTING ROD ASS'Y	1	INCLUD.9	
	9	993163	NEEDLE BEARING (M152112)	1		
	10	339999	SPINDLE AND GEAR SET	1		
	11	998010	PROTECTOR	1		
	12	993546	PIN D6	1		
	13	998005	PISTON	1		
	14	998000	MOVING BLADE	1		
	15	949812	HEX. SOCKET HD. BOLT M4 X 10 (10 PCS.)	2		
	16	998001	STATIONARY BLADE	1		
	17	998009	SLOTTED HD. SET SCREW M4 X 14	1		
	18	949565	LOCK NUT M4 (10 PCS.)	1		
	19	949454	SPRING WASHER M5 (10 PCS.)	1		
	20	949237	MACHINE SCREW M5 X 12 (10 PCS.)	1		
	21	998007	BLADE HOLDER	1		
	22	328200	BRUSH CAP	2		
	23	999054	CARBON BRUSH 5 X 6 X 11.5 (1 PAIR)	2		
*	24	328202	BRUSH BLOCK	1		
*	24	334696	BRUSH BLOCK	1	FOR EUROPE,GBR	
	25	370161	HOUSING (A).(B) SET	1		
	26	301653	TAPPING SCREW (W/FLANGE) D4 X 20 (BLACK)	5		
	27		NAME PLATE	1		
	28	314428	SLIDE KNOB	1		
	29		HITACHI LABEL	1		
	30	328199	SLIDE BAR	1		
	31	329057	PUSHING BUTTON SWITCH	1		
*	32	370162	CONTROLLER TERMINAL SET	1		
*	32	370163	CONTROLLER TERMINAL SET	1	FOR EUROPE,GBR	
*	33	336385	BATTERY BSL 1850 (EUROPE,AUS,NZL) (2 PCS.)	2	INCLUD.504	
*	33	336265	BATTERY BSL 1850 (CHN)	2	INCLUD.504	
*	33	330068	BATTERY BSL 1830 (EUROPE,AUS,NZL)	2	INCLUD.504	
*	33	333352	BATTERY BSL 1815 (EUROPE)	2	INCLUD.504	
	34	328709	PACKING	1		
*	35	339343	SUPPORT (D)	2	FOR EUROPE,GBR	

STANDARD ACCESSORIES

	ITEM NO.	CODE NO.	DESCRIPTION	NO. USED	REMARKS	
*	501		CHARGER (MODEL UG 18YFSL)	1		
*	501		CHAEGER (MODEL UC 18YML2)	1		
*	501		CHARGER (MODEL UC 18YKSL)	1		
	502	943277	HEX. BAR WRENCH 3MM	1		
	503	949128	THICKNESS GAUGE	1		
	504	329897	BATTERY COVER	1		
	505	339992	CASE	1		

*ALTERNATIVE PARTS