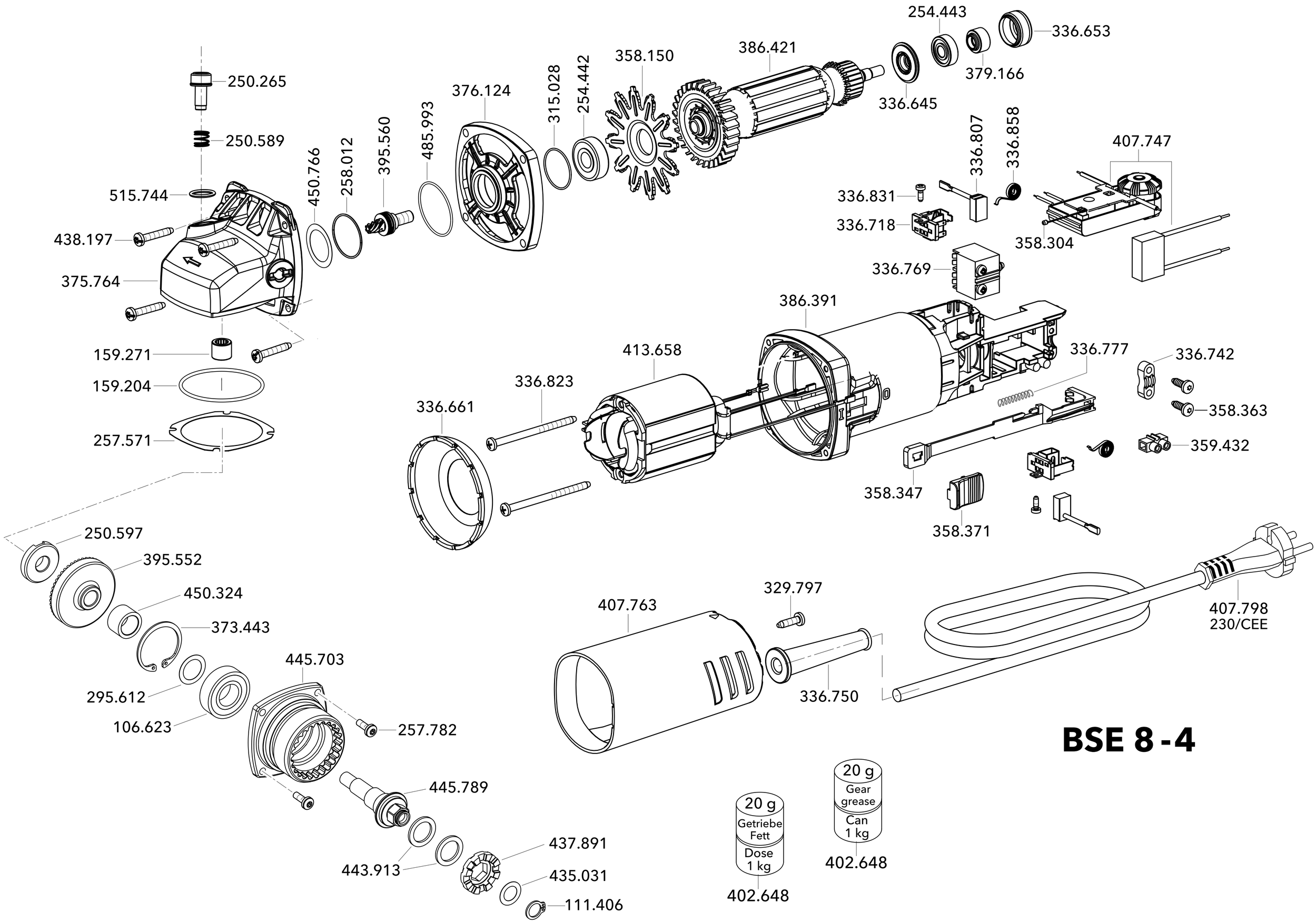
250.265
250.589
515.744
438.197
375.764
159.271
159.204
257.571
250.597
395.552
450.324
373.443
295.612
106.623
445.703
257.782
445.789
443.913
437.891
435.031
111.406
450.766
258.012
395.560
485.993
376.124
315.028
254.442
358.150
386.421
336.645
254.443
379.166
336.653
336.807
336.858
407.747
336.831
336.718
358.304
336.769
386.391
413.658
336.823
336.661
336.777
336.742
358.363
359.432
358.347
358.371
407.763
329.797
336.750
407.798
230/CEE
20 g
Getriebe
Fett
Dose
1 kg
402.648
20 g
Gear
grease
Can
1 kg
402.648

BSE 8 -4

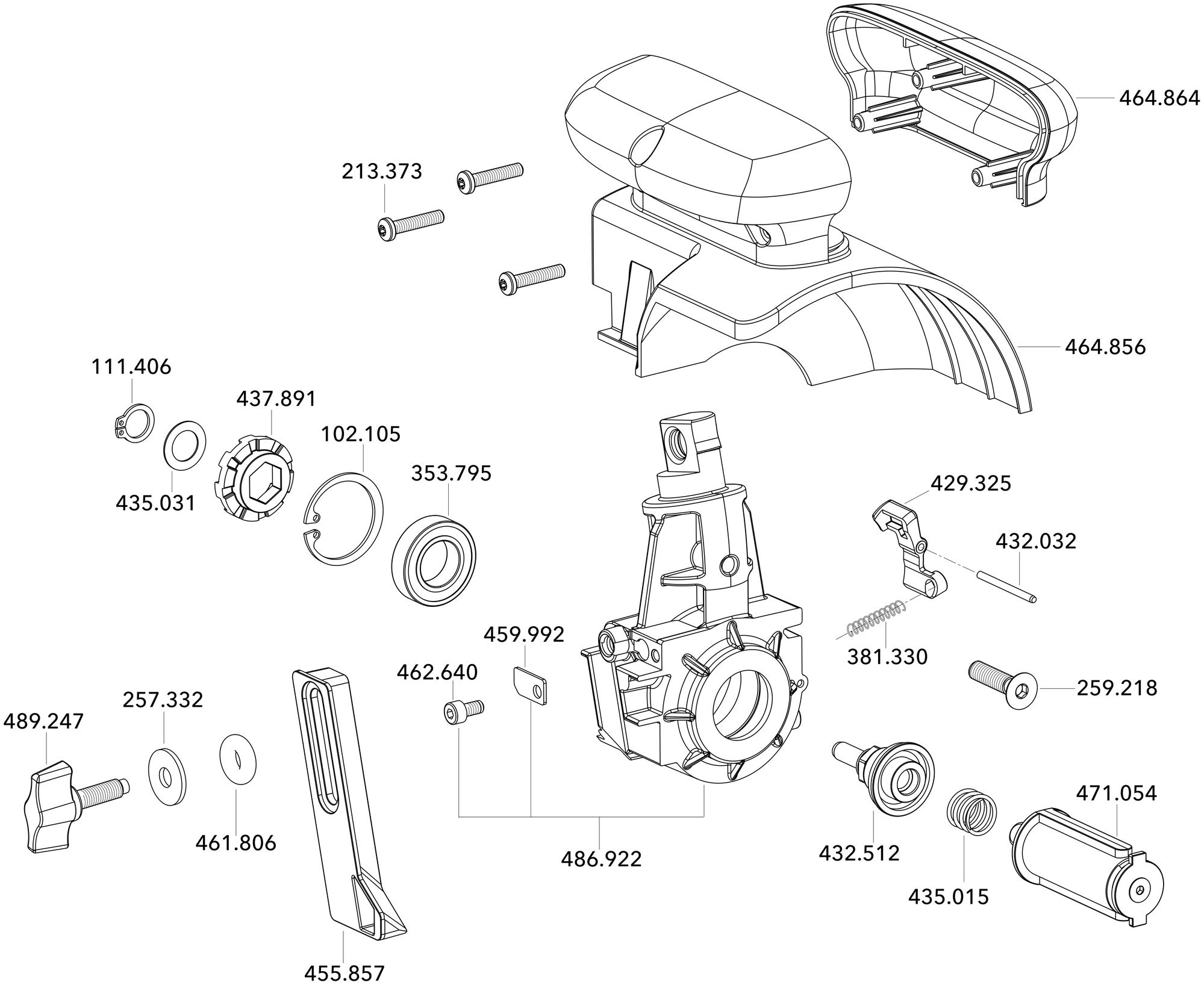
464.864
213.373
464.856
111.406
437.891
102.105
353.795
435.031
429.325
432.032
459.992
381.330
462.640
259.218
257.332
489.247
471.054
461.806
486.922
432.512
435.015
455.857