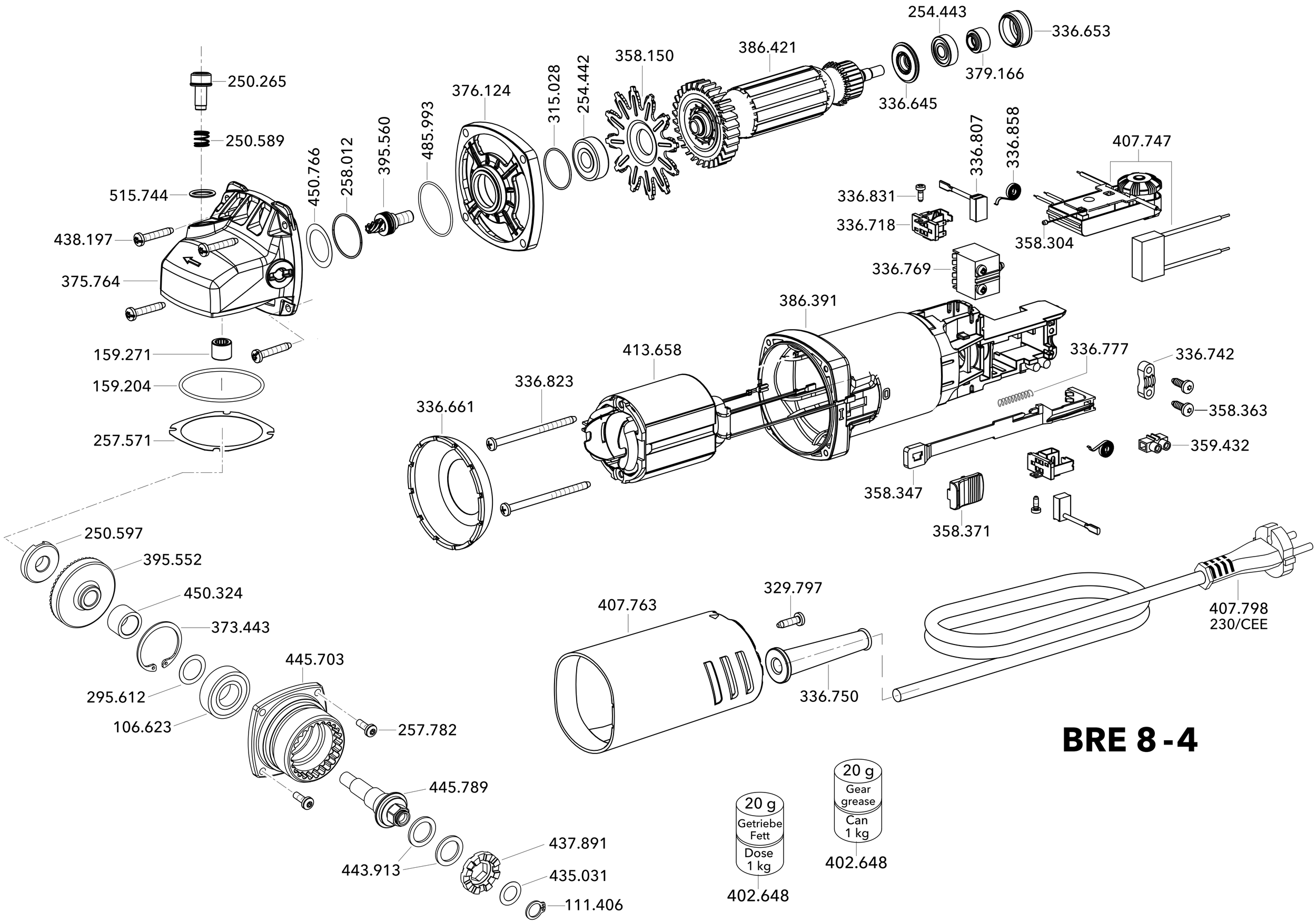
250.265
250.589
515.744
438.197
375.764
159.271
159.204
257.571
450.766
258.012
395.560
485.993
376.124
315.028
254.442
358.150
386.421
336.645
379.166
254.443
336.653
336.807
336.858
407.747
336.831
336.718
358.304
336.769
386.391
413.658
336.777
336.742
358.363
359.432
336.823
336.661
358.347
358.371
250.597
395.552
450.324
373.443
295.612
106.623
445.703
257.782
445.789
443.913
437.891
435.031
111.406
407.763
329.797
336.750
407.798
230/CEE
20 g
Getriebe
Fett
Dose
1 kg
402.648
20 g
Gear
grease
Can
1 kg
402.648
BRE 8 -4

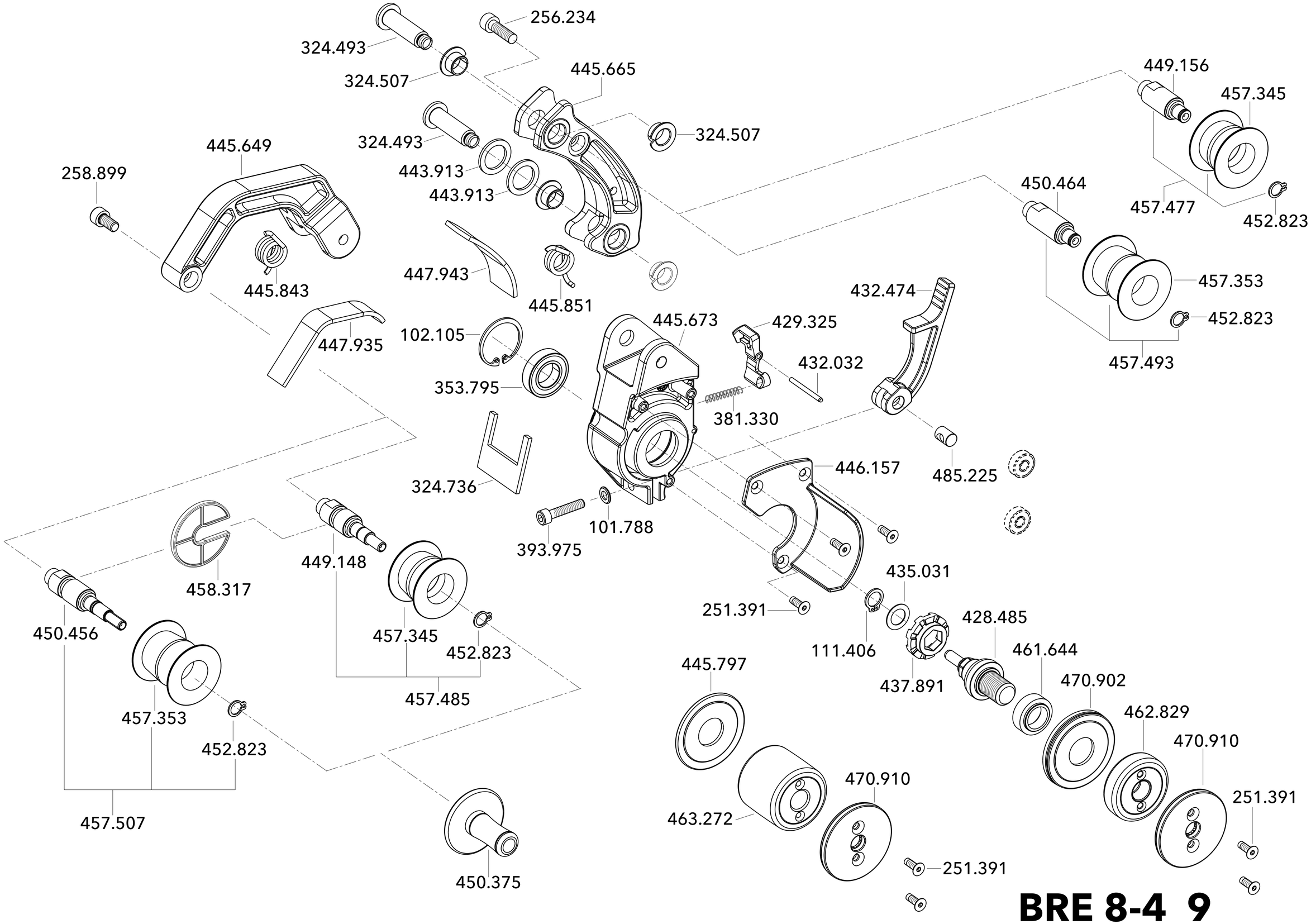
256.234
324.493
324.507
445.665
449.156
457.345
324.493
324.507
445.649
258.899
443.913
443.913
450.464
457.477
452.823
447.943
445.843
445.851
457.353
432.474
452.823
445.673
429.325
102.105
447.935
432.032
457.493
353.795
381.330
446.157
485.225
324.736
101.788
393.975
449.148
458.317
435.031
251.391
450.456
457.345
452.823
111.406
428.485
461.644
445.797
457.485
437.891
470.902
457.353
462.829
452.823
470.910
470.910
251.391
463.272
457.507
251.391
450.375

BRE 8-4 9