0 601 936 647
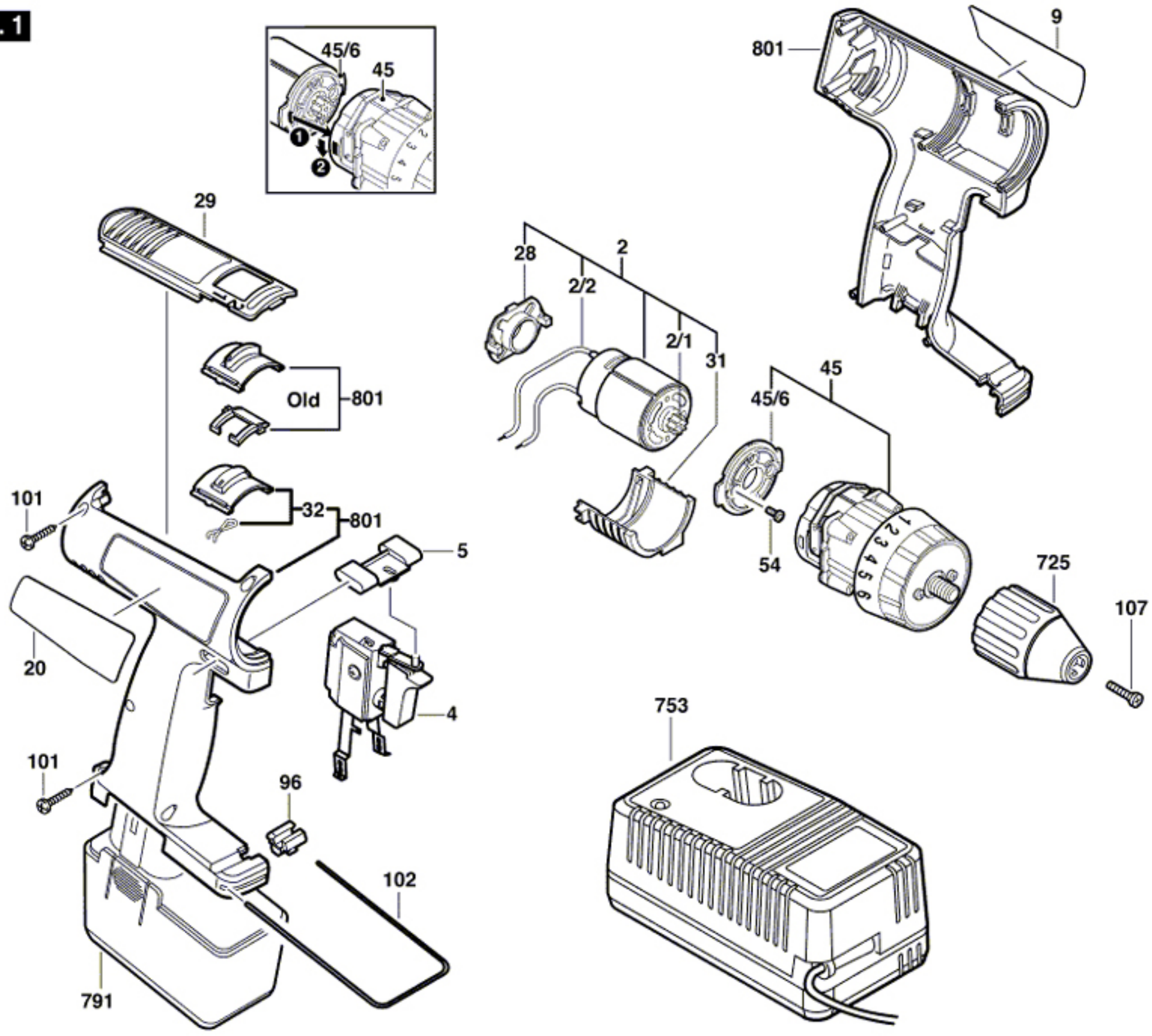
Issue Stand } 00-03-23 **Fig./Abb. 1**