SERVICE PARTS LIST

BULLETIN NO.
54-05-0558

SPECIFY CATALOG NO. AND SERIAL NO. WHEN ORDERING PARTS			REVISED BULLETIN	DATE
10 GALLON WET OR DRY VACUUM CLEANER			54-05-0557	Sept. 2014
CATALOG NO. 8955	STARTING SERIAL NO.	**SERIES S10**	WIRING INSTRUCTION	

00 | 0 **EXAMPLE:** Component Parts (Small #) Are Included When Ordering The Assembly (Large #).

★ = **Part number change** from previous service parts list.

FIG.	PART NO.	DESCRIPTION OF PART	NO. REQ.
1	31-15-0136	Housing Cap	(1)
2	23-66-2545	Switch	(1)
3	31-50-0182	Motor Housing	(1)
4	22-90-0145	Strain Relief Bushing	(1)
5	22-64-0147	Power Cord	(1)
6	06-95-5319	#10 x 3/8" Slt. Hex Hd. Ground Screw	(1)
7	06-97-3400	#10 Split Ring Lockwasher	(1)
8	43-44-0555	Motor Bottom Gasket	(1)
9	23-30-0165	Motor	(1)
11	42-46-0100	Ball Float	(1)
12	31-15-0145	Plastic Cover Lid	(1)
13	12-99-8957	Service Nameplate	(1)
14	49-90-1830	Cartridge Filter	(1)
15	06-95-5391	#10 x 3" Self-Tapping Slt. Hex Hd. Screw	(3)
16	06-95-5330	#10 x 3/4" Self-Tapping Slt. Hex Hd. Screw	(8)
17	42-68-0410	Buckle	(3)
18	06-95-5320	#10 x 1/2" Slt. Hex Hd. Screw	(3)
19	14-34-0440	Handle Package (2 Handles and 4 Screws)	(1)
★ 20	44-66-0086	Tank (Painted metal design shown)	(1)
21	42-86-0120	Inlet Fitting	(1)
22	43-62-1040	Metal Handle	(1)
23	45-94-0295	Wheel	(2)
24	43-40-0280	Front Frame	(1)
25	06-81-4960	#8 x 1/2" Type A Phillips	(1)
26	44-66-0870	Caster Socket	(1)
27	----------	Axle	(1)
28	43-40-0300	Rear Frame	(1)
29	42-52-0270	Hub Cap	(2)
30	45-94-0290	Caster	(1)
31	06-75-0100	1/4-20 x 3/4" Hex Hd. Mach. Screw	(4)
32	45-88-7500	1/4" Flatwasher	(4)
33	06-55-1525	1/4"-20 Hex Nut	(4)
34	43-44-0540	Motor Top Gasket	(1)
35	44-66-5365	Motor Plate	(1)
36	10-20-8950	Warning Label	(1)
37	10-20-8955	French/Spanish Label	(1)
	22-18-0195	Carbon Brush Set	(1)

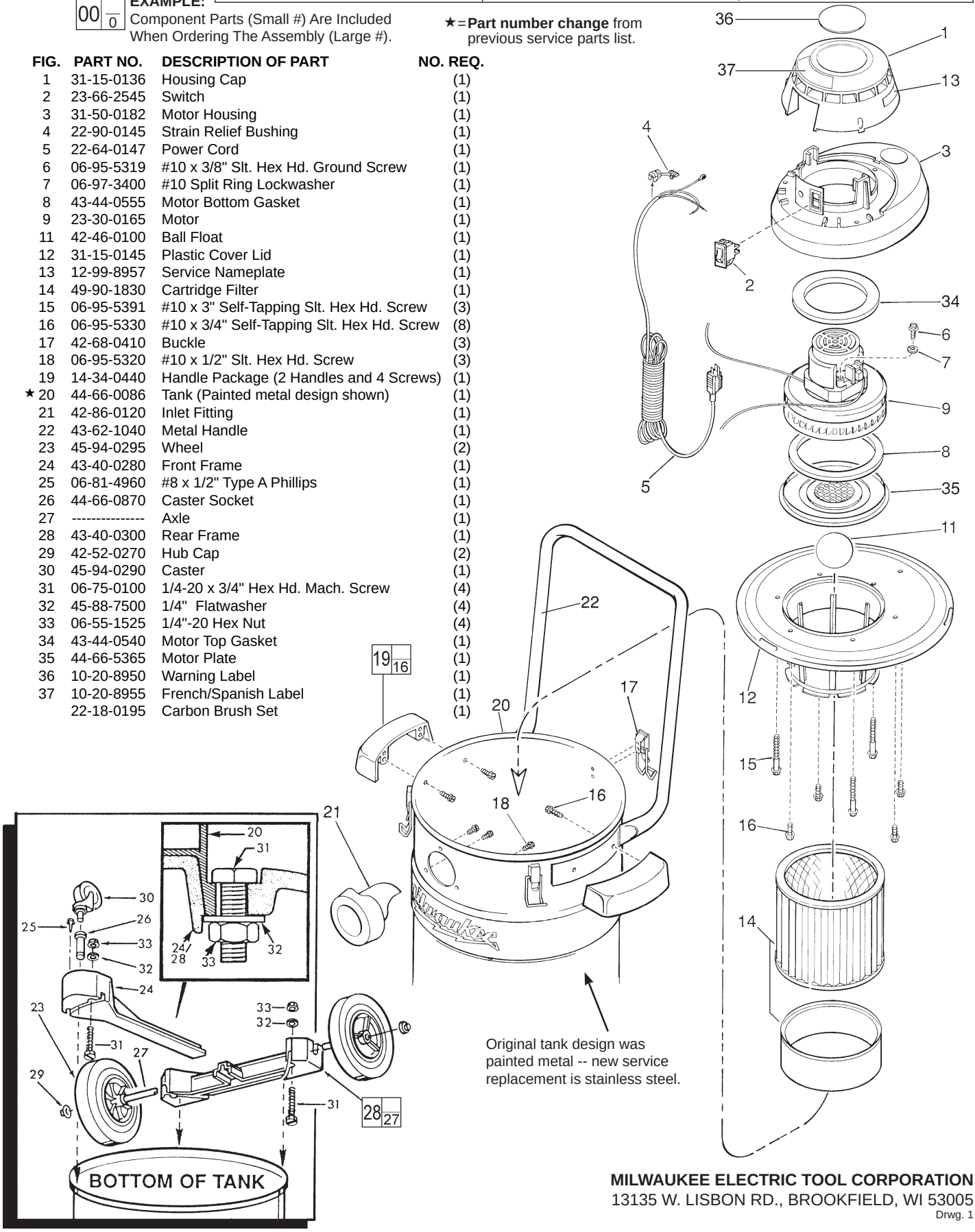

MILWAUKEE ELECTRIC TOOL CORPORATION
13135 W. LISBON RD., BROOKFIELD, WI 53005

Drwg. 1