PORTER-CABLE

WARNING: Electrical repairs should only be attempted by trained repairmen. Contact the nearest Porter-Cable Service Center or other competent repair center.

745

TIGER SAW®

All-Purpose Saw
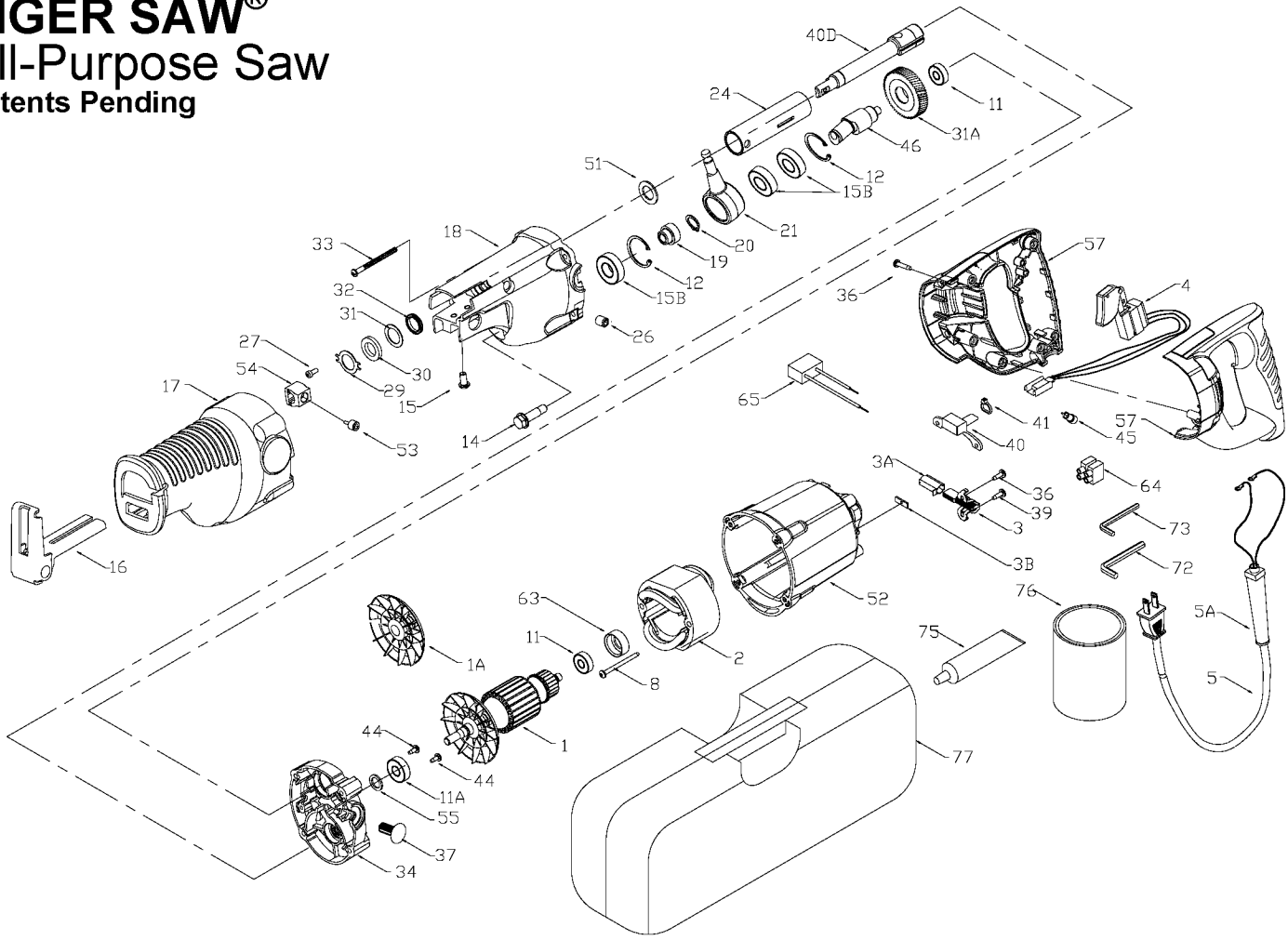
Patents Pending