SERVICE PARTS LIST

BULLETIN NO. 54-44-0535

SPECIFY CATALOG NO. AND SERIAL NO. WHEN ORDERING PARTS		REVISED BULLETIN	DATE MAY '87
POWER UNIT		WIRING INSTRUCTION	
CATALOG NO. 6851	STARTING SERIAL NO. 758-1001	58-01-0017	

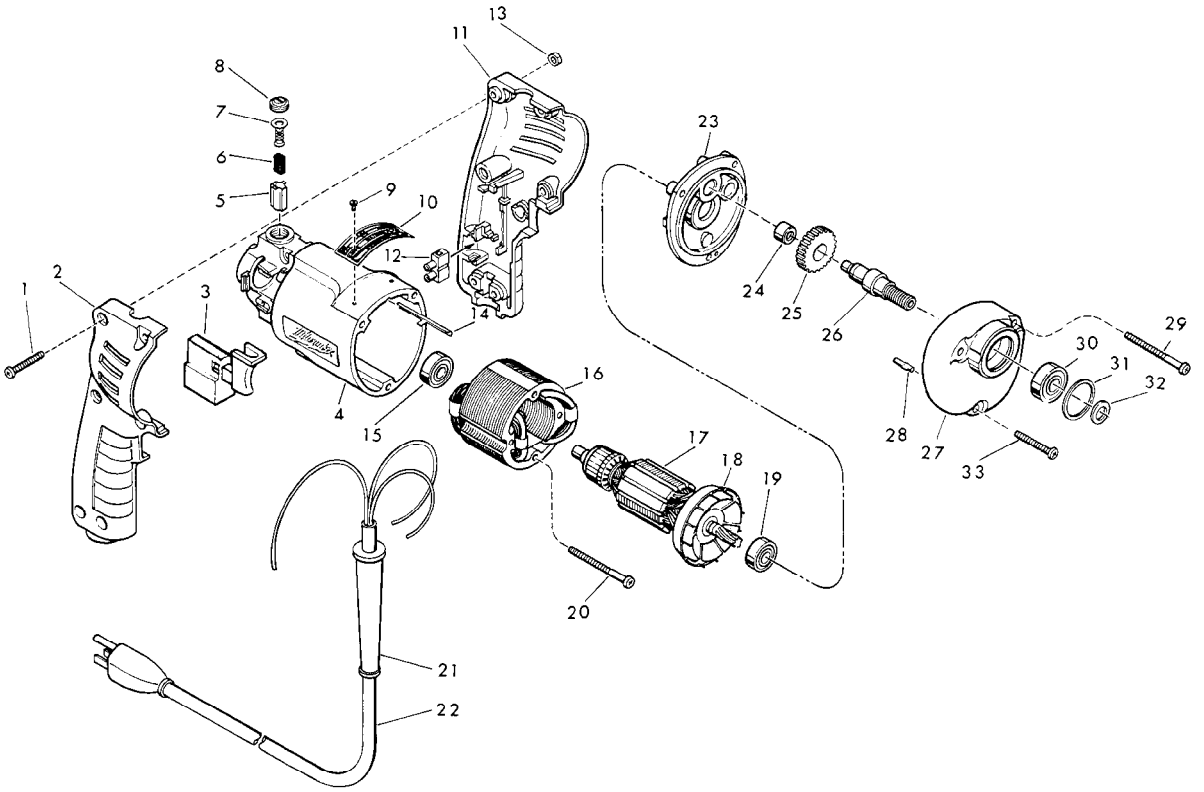

FIG.	PART NO.	DESCRIPTION OF PART	NO. REQ.
1	06-82-2361	8-32x15/16" Pan Hd. Slt. Plas. Torx Screw	(6)
2	31-44-1130	Right Handle Half	(1)
3	23-66-1250	Speed Control Switch	(1)
4	31-50-0345	Motor Housing	(1)
5	22-20-0530	Brush Tube	(2)
6	22-16-0275	Carbon Brush	(2)
7	23-52-0210	Brush Spring Assembly	(2)
8	23-44-0120	Brush Retaining Screw	(2)
9	06-85-0200	Nameplate Screw	(2)
10	12-99-0028	Nameplate Blank	(1)
11	31-44-1140	Left Handle Half	(1)
12	22-56-0456	Terminal Block	(1)
13	06-55-0835	8-32 Hex Nut	(6)
14	44-60-0530	Ground Pin	(1)
15	02-04-0645	Ball Bearing	(1)
16	18-10-0060	120 V Field	(1)
17	16-10-0440	120 V D.I. Armature - (Incl. Fig. No. 18)	(1)
18	22-84-0760	Fan Assembly	(1)
19	02-04-0847	Ball Bearing	(1)
20	06-82-7368	7-18x1-3/4" Pan Hd. Slt. Plas.Torx Screw	(2)
21	44-76-0130	Cord Protector	(1)
22	22-64-1120	Cord Set	(1)
23	28-28-1780	Diaphragm	(1)
24	02-50-1620	Needle Bearing	(1)
25	32-75-3260	Spindle Gear	(1)
26	38-50-5670	Spindle	(1)
27	28-14-1830	Gear Case	(1)
28	06-65-0825	1/8 x 1/2" Groove Pin 5	(1)
29	06-82-7344	7-18 x 1-1/2" Pan Hd. Slt. Plas. Torx Screw	(2)
30	02-04-1020	Ball Bearing	(1)
31	34-80-1400	Retaining Ring	(1)
32	45-88-7940	Washer	(1)
33	06-82-7308	7 x 1-1/8" Pan Hd. Slt. Plas. Torx Screw	(1)

FIG.	LUBRICATION
27	1-1/8 Oz. of Type "E" Grease In Gear Case

MILWAUKEE ELECTRIC TOOL CORPORATION
13135 W. LISBON RD., BROOKFIELD, WIS. 53005