SERVICE PARTS LIST

BULLETIN NO.
55-42-6202

SPECIFY CATALOG NO. AND SERIAL NO. WHEN ORDERING PARTS				REVISED BULLETIN	DATE
DRYWALL SCREWDRIVER				55-42-6201	June 2012
CATALOG NO.	**6743-50**	STARTING SERIAL NO.	**159C**	WIRING INSTRUCTION **See Pages 2 & 3**	

EXAMPLE:
00 | 0 — Component Parts (Small #) Are Included When Ordering The Assembly (Large #).

★ = **Part number change** from previous service parts list.

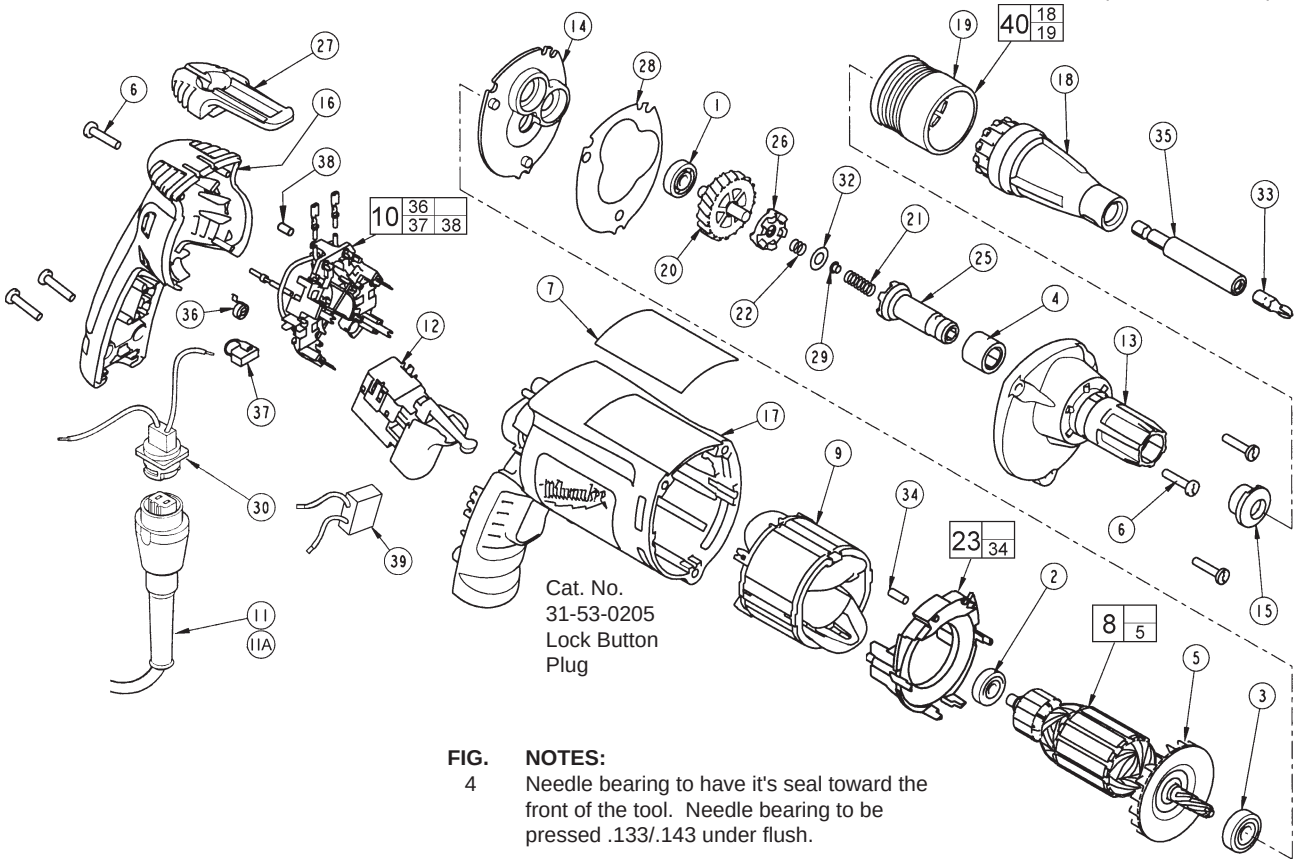

FIG. **NOTES:**
4 Needle bearing to have it's seal toward the front of the tool. Needle bearing to be pressed .133/.143 under flush.

FIG.	PART NO.	DESCRIPTION OF PART	NO. REQ.
1	02-04-0640	Ball Bearing	(1)
2	02-04-0645	Ball Bearing	(1)
3	02-04-0852	Ball Bearing	(1)
4	02-50-3245	Needle Bearing	(1)
5	22-84-0840	Fan	(1)
6	06-82-7275	7-18 x 3/4" Slotted Plastite Torx T-20	(6)
7	12-99-2678	Service Nameplate	(1)
8	16-14-2201	Armature	(1)
9	18-04-2200	Field	(1)
10	22-18-1220	Brush Card Assembly	(1)
11	48-76-5012	Quik-lok Cord Set	(1)
11A	22-64-0684	Quik-lok Cord Set (Australia)	(1)
★ 12	23-66-2615	Defond Switch (See page 2 wiring)	(1)
★12A	23-66-2135	Marquardt Switch (See page 3 wiring)	(1)
13	28-14-2375	Gearcase	(1)
14	28-28-2315	Diaphragm	(1)
15	30-37-0046	Drywall Nose Guide	(1)
16	31-15-2030	Handle Halve	(1)
★ 17	31-50-4030	Motor Housing	(1)
18	31-51-0095	Drywall Locator	(1)
19	31-58-0515	Snap Sleeve	(1)
20	32-10-0521	Clutch Gear Assembly	(1)
21	40-50-0095	Separator Spring	(1)
22	40-50-8515	Bias Spring	(1)
23	42-14-0460	Baffle Assembly	(1)
25	42-66-0715	Clutch Chuck Assembly	(1)
26	42-70-0310	Drive Clutch	(1)
27	42-70-5280	Belt Clip	(1)
28	43-44-0985	Gasket	(1)
29	44-60-0505	Thrust Pin	(1)
30	22-56-1015	Blade Housing Assembly	(1)

FIG.	PART NO.	DESCRIPTION OF PART	NO. REQ.
32	45-88-0555	Clutch Thrust Washer	(1)
33	48-32-1040	#2 Phillips Insert Bit	(1)
34	45-30-0030	Slug	(2)
35	48-32-3065	Magnetic Bit Holder	(1)
36	23-52-1610	Brush Spring	(2)
37	22-18-1320	Brush Assembly	(2)
38	45-30-0035	Slug	(1)
39	22-33-0550	Suppressor	(1)
40	49-26-1036	Drywall Locator Assembly	(1)

FIG. **LUBRICATION:**

20,22 Place .02 oz. (.5 grams) of type "Y" grease, No 49-08-5270, on bias spring. Place .02 oz. (.5 grams) total of grease in the clutch pockets of clutch gear.

8,13 Place .27 oz. (7.6 grams) of type "Y" grease at the armature pinion location in the gearcase pocket and push down .20".

13,14 Apply a light film of type "Y" grease to needle and ball bearing pockets in diaphragm and gearcase prior to pressing bearings in.

21,32 Place .02 oz. (.5 grams) of type "Y" grease to clutch thrust washer, thrust pin and separator spring during assembly.

MILWAUKEE ELECTRIC TOOL CORPORATION
13135 W. LISBON RD., BROOKFIELD, WI 53005

Drwg. 3