SERVICE PARTS LIST

BULLETIN NO. 54-42-0310

SPECIFY CATALOG NO. AND SERIAL NO. WHEN ORDERING PARTS			REVISED BULLETIN	DATE
0-1000 R.P.M. REV. SCREWDRIVER			54-42-0309	Nov. '94
CATALOG NO. 6543-1	STARTING SERIAL NO.	469D	WIRING INSTRUCTION 58-01-0032	

EXAMPLE:

00 | 0 — Component Parts (Small #) Are Included When Ordering The Assembly (Large #).

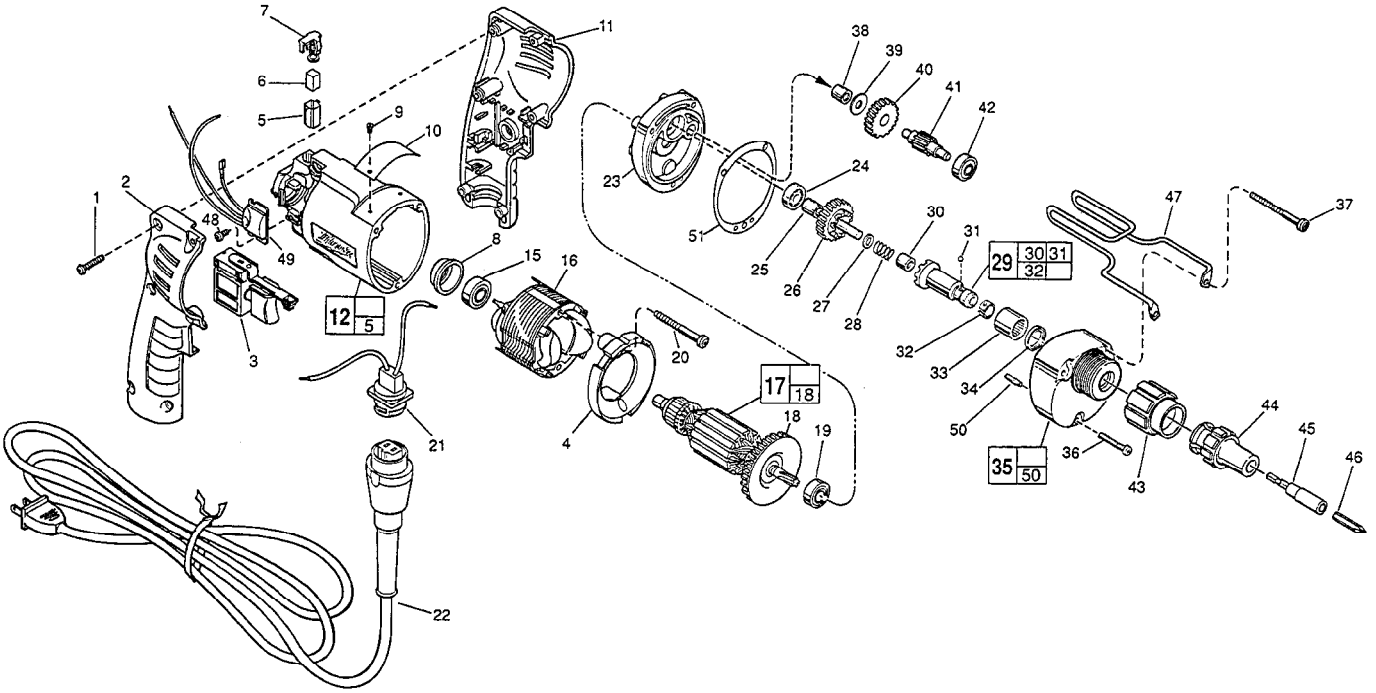

FIG.	PART NO.	DESCRIPTION OF PART	NO. REQ.
1	06-82-7284	8-16 x 3/4" Pan Hd. Slt. Plast. T-20	(6)
2	31-44-1845	Right Handle Half	(1)
3	23-66-2145	Speed Control Switch	(1)
4	42-14-0380	Baffle	(1)
5	22-20-0830	Brush Tube	(2)
6	22-16-0275	Carbon Brush	(2)
7	23-52-1560	Brush Spring Assembly	(2)
8	22-72-0100	Bearing Cup	(1)
★ 9	06-72-1720	Nameplate Rivet	(2)
10	12-99-0860	Service Nameplate	(1)
11	31-44-1840	Left Handle Half	(1)
★ 12	14-38-0591	Motor Housing Assembly	(1)
15	02-04-0645	Ball Bearing	(1)
16	18-11-0150	120 Volt Field	(1)
17	16-10-0680	120 Volt Armature	(1)
18	22-84-0880	Fan Assembly	(1)
19	02-04-0851	Ball Bearing	(1)
20	06-82-7203	7-18 x 2-1/8" Pan Hd. Slt. Plast. T-20	(2)
21	22-56-0665	Blade Housing Assembly	(1)
22	48-76-5010	Cord Set	(1)
23	28-28-1961	Diaphragm	(1)
24	02-04-0645	Ball Bearing	(1)
25	45-36-1280	Spacer	(1)
26	32-10-4050	Clutch Gear Assembly	(1)
27	45-88-0712	Thrust Washer	(1)
28	40-50-6600	Separator Spring	(1)
29	42-66-0766	Clutch Chuck Assembly	(1)
30	02-50-2400	Needle Bearing	(1)
31	02-02-0130	Steel Ball	(1)
32	40-50-0510	Bit Retaining Spring	(1)
33	02-50-4220	Needle Roller Bearing	(1)
34	45-06-0106	Oil Seal	(1)
35	14-30-0600	Gear Case Assembly	(1)
36	06-82-7344	7-18 x 1-1/2" Pan Hd. Slt. Plast. T-20	(1)
37	06-82-7464	7-18 x 2-3/4" Pan Hd. Slt. Plast. T-20	(2)
38	02-50-2410	Needle Bearing	(1)

FIG.	PART NO.	DESCRIPTION OF PART	NO. REQ.
39	45-88-7990	Thrust Washer	(1)
40	32-40-1613	Intermediate Gear	(1)
41	36-66-4096	Intermediate Pinion Shaft	(1)
42	02-04-0640	Ball Bearing	(1)
43	48-32-1000	Bit Housing	(1)
44	48-32-0250	Bit Guide	(1)
	48-32-0608	Long Bit Guide (Refer To Catalog)	(1)
	48-32-1012	Long Bit Guide (Refer To Catalog)	(1)
45	48-32-3050	Bit Holder - Non Magnetic	(1)
	48-30-2600	Bit & Finder Combination (Refer To Catalog)	(1)
	48-30-2650	Bit & Finder Combination (Refer To Catalog)	(1)
46	48-32-1050	#2 Insert Bit	(1)
47	42-70-5080	Belt Clip	(1)
48	06-82-7212	4-20 x 1/4" Pan Hd. Slt. Plast. T-10	(1)
49	14-20-0750	Remote Electronic Assembly	(1)
50	06-65-0825	1/8 x 1/2 Groove Pin 5	(1)
51	43-44-0925	Gasket	(1)

FIG.	LUBRICATION
35	1-1/2 Oz. Type "E" Grease, No. 49-08-4122. Place Near Intermediate Shaft Ball Bearing In Gear Case.

FIG.	NOTES
1	Torque to 18-28 In./Lbs.
20,36, 37	Torque to 15-20 In./Lbs.
48	Torque to 3-5 In./Lbs.
8	Place in motor housing before inserting armature.
30,33	Press only on end with manufacturer ID.
30	Press 11/64" from clutch face.
34	Lip towards front of gear case.
15,19,24	Seal towards armature.
33,38	Press flush to casting surface.

MILWAUKEE ELECTRIC TOOL CORPORATION
13135 W. LISBON RD., BROOKFIELD, WI 53005