SERVICE PARTS LIST

BULLETIN NO. 54-40-0750

SPECIFY CATALOG NO. AND SERIAL NO. WHEN ORDERING PARTS			REVISED BULLETIN	DATE
TRIGGER SPEED CONTROL SAWZALL			54-40-0109	Apr. '96
CATALOG NO. 6507	STARTING SERIAL NO.	**631C**	WIRING INSTRUCTION **58-01-0257**	

EXAMPLE: 00 0 Component Parts (Small #) Are Included When Ordering The Assembly (Large #).

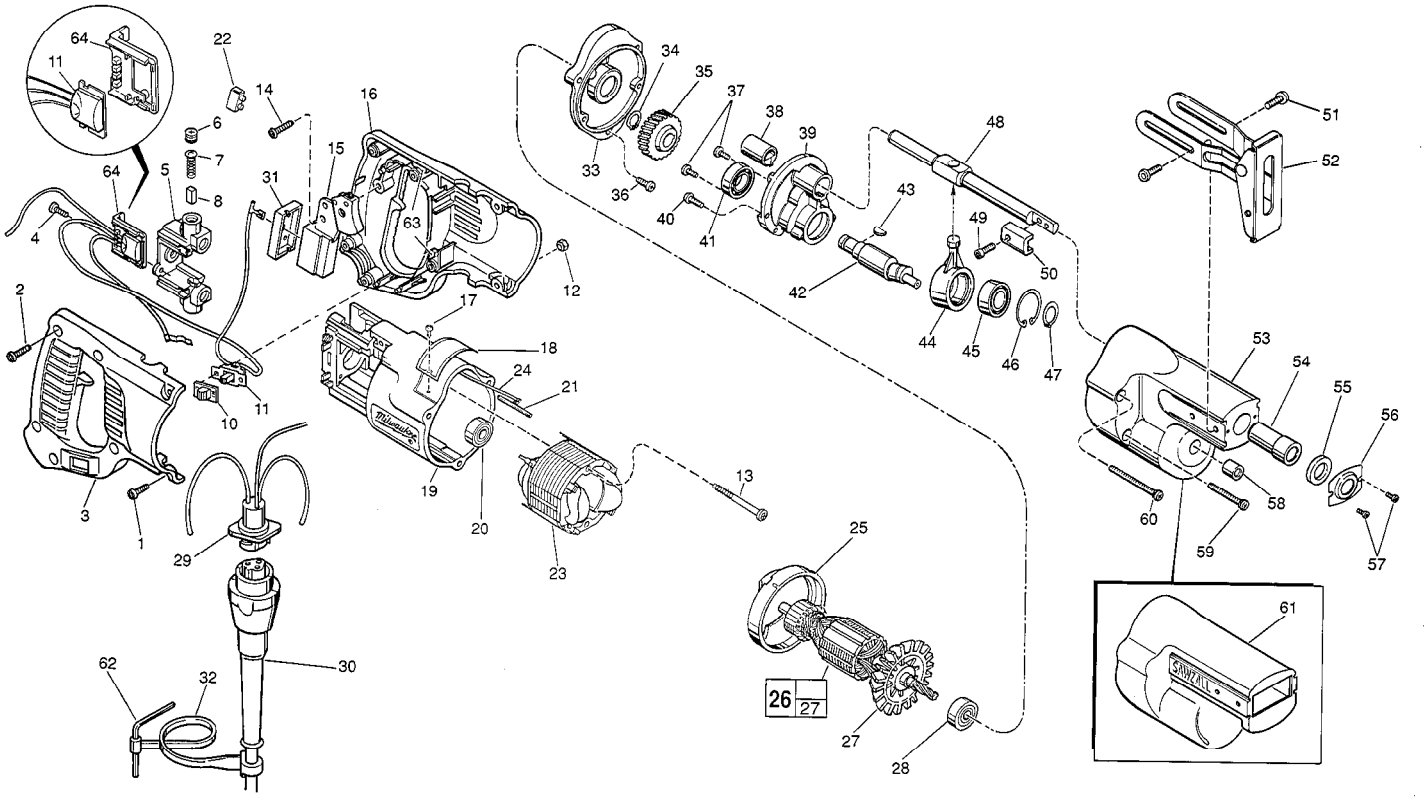

FIG.	PART NO.	DESCRIPTION OF PART	NO. REQ.
★ 1	06-82-2390	8-32 x 1-1/4" Pan Hd. Slotted T-20	(2)
2	06-82-7270	8-16 x 5/8" Pan Hd. Plastite T-20	(5)
3	31-44-1661	Right Handle Half	(1)
★ 4	06-82-7240	6-19 x 1/2" Pan Hd. Slotted Plastite T-15	(2)
5	22-22-1380	Brush Holder Assembly	(1)
6	23-44-0190	Brush Retaining Cap	(2)
7	23-52-0160	Brush Spring	(2)
8	22-16-0275	Carbon Brush	(2)
10	31-12-0190	Switch Cap	(1)
★ 11	14-20-0281	Switch Assembly	(1)
★ 12	06-55-0835	8-32 Hex Nut	(2)
★ 13	06-82-7410	8-16 x 1-7/8" Pan Hd. Plastite T-20	(2)
14	06-82-7270	8-16 x 5/8" Pan Hd. Plastite T-20	(1)
15	23-66-1490	Switch	(1)
16	31-44-1666	Left Handle Half	(1)
17	06-72-1720	Nameplate Rivet	(2)
18	12-99-1730	Service Nameplate	(1)
★ 19	31-50-0020	Motor Housing	(1)
20	02-04-0845	Ball Bearing	(1)
★ 21	44-60-0530	Ground Pin	(1)
★ 22	22-56-0456	Terminal Block	(1)
23	18-31-0200	120V Field	(1)
★ 24	23-94-6100	Ground Wire Assembly	(1)
★ 25	31-05-0055	Baffle	(1)
26	16-30-0425	120 V. Armature	(1)
27	22-84-0531	Fan Assembly	(1)
28	02-04-0911	Ball Bearing	(1)
★ 29	22-56-0542	Pin Housing Assembly	(1)
30	48-76-3008	Cord Set	(1)
31	45-12-0470	Dust Shield	(1)
32	48-66-4080	Key Holder	(1)
33	28-28-0350	Diaphragm	(1)
34	34-60-0920	External Retaining Ring	(1)
35	32-40-1920	Intermediate Gear	(1)
★ 36	05-88-8306	K50 x 22mm Fil. Hd. PT T-20	(1)
37	06-95-0075	6-32 x 3/8" Truss Hd. Taptite Screw	(2)
38	42-24-0250	Rear Spindle Bearing	(1)
39	28-72-1002	Bearing Plate	(1)
40	06-82-3056	8-32 x 1/2" Fil. Taptite T-20	(2)
41	02-04-1510	Ball Bearing	(1)
42	36-92-0720	Wobble Shaft	(1)
43	06-42-1200	Woodruff Key	(1)
44	30-72-0060	Wobble Plate	(1)
45	02-04-1510	Ball Bearing	(1)
46	34-80-2355	Internal Retaining Ring	(1)
47	34-60-1200	Retaining Ring	(1)
48	38-50-5410	Reciprocating Spindle	(1)
49	06-75-2402	10-32 x 9/16" Socket Hd. Cap Screw	(1)
50	42-68-0073	Blade Clamp	(1)
51	06-95-6270	10-24 x 1/2" Pan Hd. Taptite Sems	(4)
52	45-16-0495	Pivot Shoe Assembly	(1)
53	28-14-1780	Gear Case	(1)
54	42-24-0320	Spindle Bearing	(1)
55	45-06-0300	Felt Seal	(1)
56	44-86-0370	Seal Retainer	(1)
57	06-95-0050	4-40 x 3/16" Pan Hd. Taptite Screw	(2)
58	02-50-1640	Needle Bearing	(1)
59	06-82-3154	8-32 x 1-3/8" Fil. Hd. Taptite T-20	(2)
★ 60	05-88-8305	K50 x 54mm Fil. Hd. PT T-20	(2)
61	45-12-0305	Gear Case Insulator	(1)
62	49-96-0070	5/32" Socket Wrench	(1)
63	14-46-1001	Foam Slug Kit (10 Slugs)	(2)
★ 64	43-72-0176	Heat Sink Holder	(1)

FIG.	NOTES
34,46,47	Burr Side Out.
38	V-Notch Press In From Diaphragm Side.
40	Apply Type 242 Blue Loctite.

FIG.	LUBRICATION
35, 39	1/2 Oz. Type "A" Lubricant, No. 49-08-0800.
53	2-1/2 Oz. Type "B" Lubricant, No. 49-08-0600.

MILWAUKEE ELECTRIC TOOL CORPORATION
13135 W. LISBON RD., BROOKFIELD, WI 53005

Drwg. 1