CORDLESS DRIVER-DRILL

Model 6400D
Model 6400DW

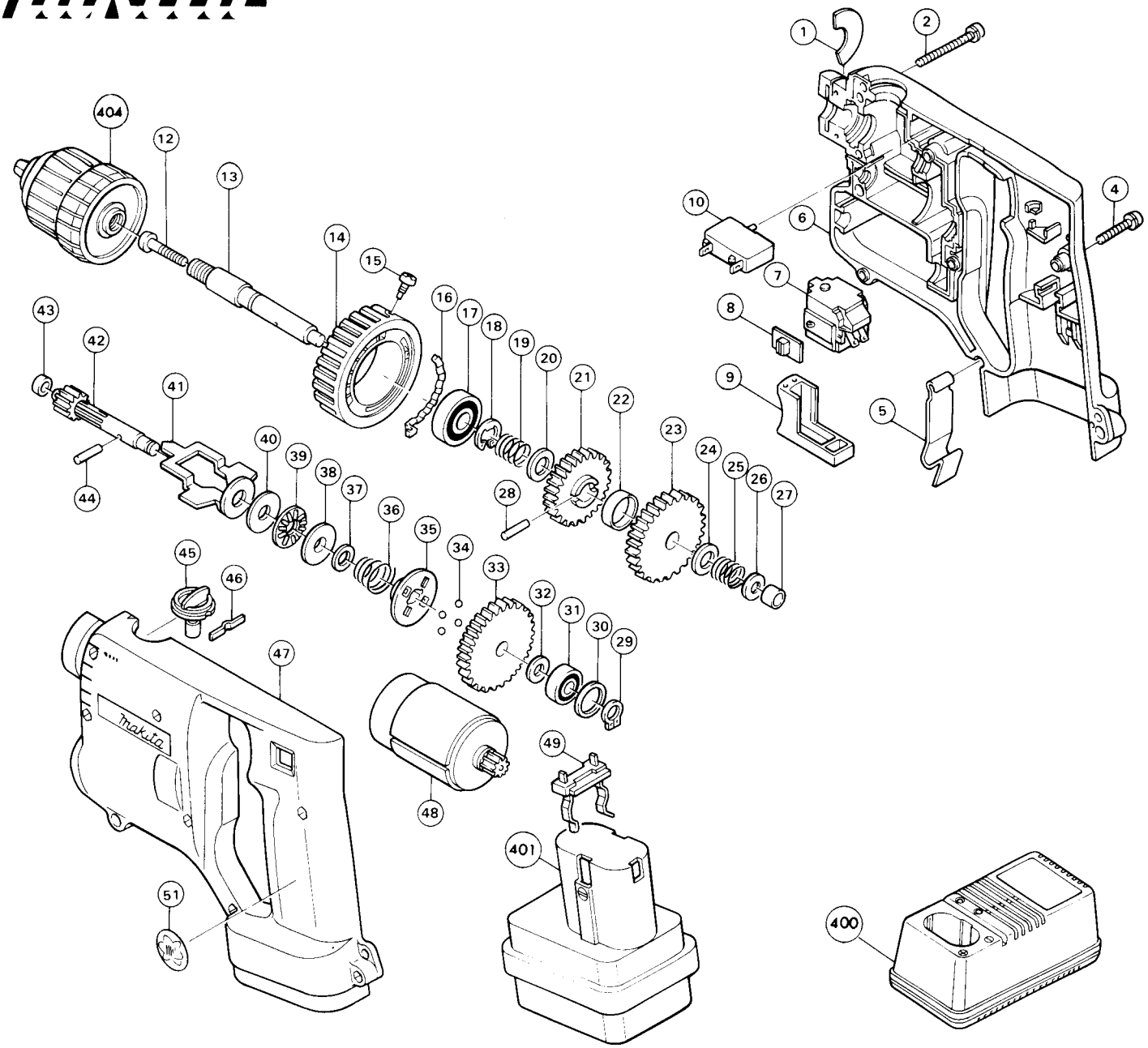

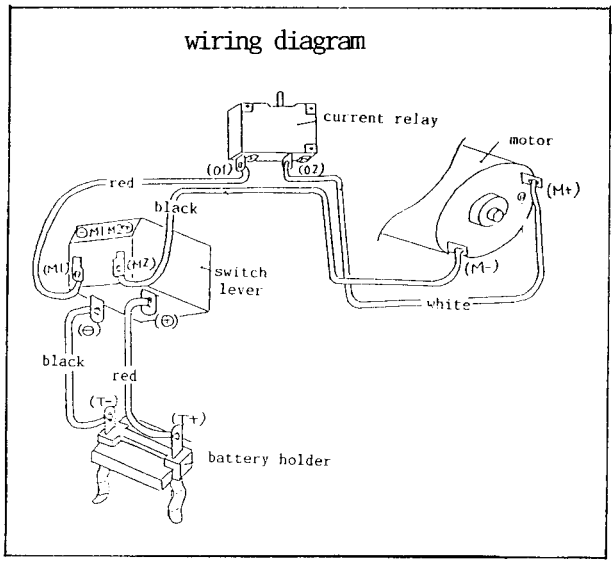

IMPORTANT — To assure product SAFETY and RELIABILITY, repairs, maintenance or adjustments should be performed by MAKITA Service Centers or other qualified service organizations. Always use MAKITA replacement parts.

Item No.	Part No.	No. Used	Description
1	343421-6	2	Guide Plate
2	911163-6	2	Pan Head Screw M4x35
4	911143-2	6	Pan Head Screw M4x22
5	343579-1	1	Set Plate
6	182330-2	1	Housing Set (Inc. Fig. 47)
7	651909-5	1	Switch
8	414740-8	1	Lever
9	414708-4	1	Switch Lever
10	652532-9	1	Over Current Relay
12	251451-2	1	Pan Head Screw M5x22
13	321995-7	1	Spindle
14	410936-9	1	Change Ring
15	251322-3	2	Pan Head Screw M5x12
16	343410-1	1	Cam Plate
17	211061-7	1	Ball Bearing 6000LLB
18	961015-1	1	Stop Ring E-9
19	231250-8	1	Compression Spring 10
20	253330-0	1	Thin Washer 10
21	221862-5	1	Spur Gear 78
22	257073-6	1	Ring 16
23	221884-5	1	Spur Gear 93
24	253330-0	1	Thin Washer 10
25	231250-8	1	Compression Spring 10
26	253807-5	1	Flat Washer 5
27	214017-9	1	Plane Bearing 5
28	256101-4	1	Pin 3
29	961002-0	1	Retaining Ring S-6
30	253842-3	1	Flat Washer 14
31	211016-2	1	Ball Bearing 626LLB
32	253804-1	1	Flat Washer 6
33	226229-2	1	Spur Gear 113
34	216011-7	4	Steel Ball 5.6
35	223086-9	1	Clutch Cam
36	231927-5	1	Conical Compression Spring
37	257141-5	1	Ring 8
38	341902-4	1	Disc
39	216401-4	1	Thrust Needle Gauge 1023
40	253851-2	1	Flat Washer 8
41	164840-1	1	Slider
42	226062-2	1	Gear Complete 12-28
43	214019-5	1	Plane Bearing 4
44	256119-5	1	Pin 3
45	168096-8	1	Shifter
46	232053-3	1	Leaf Spring
47	182330-2	1	Housing Set (Incl. Fig. 6)
48	629618-4	1	DC Motor (Incl. Spur Gear 19, 226228-4)
49	643909-9	1	Battery Holder
51	818057-5	1	Label

ACCESSORIES

400	113103-2		Charger
401	192019-4		Battery
402	182340-9		Plastic Tool Case
403	784203-1		Phillips Bit 2-65
404	763083-8		Keyless Chuck