DELTA
A Pentair Company

50-179
DUST COLLECTOR

DC-2
Part No 1346938
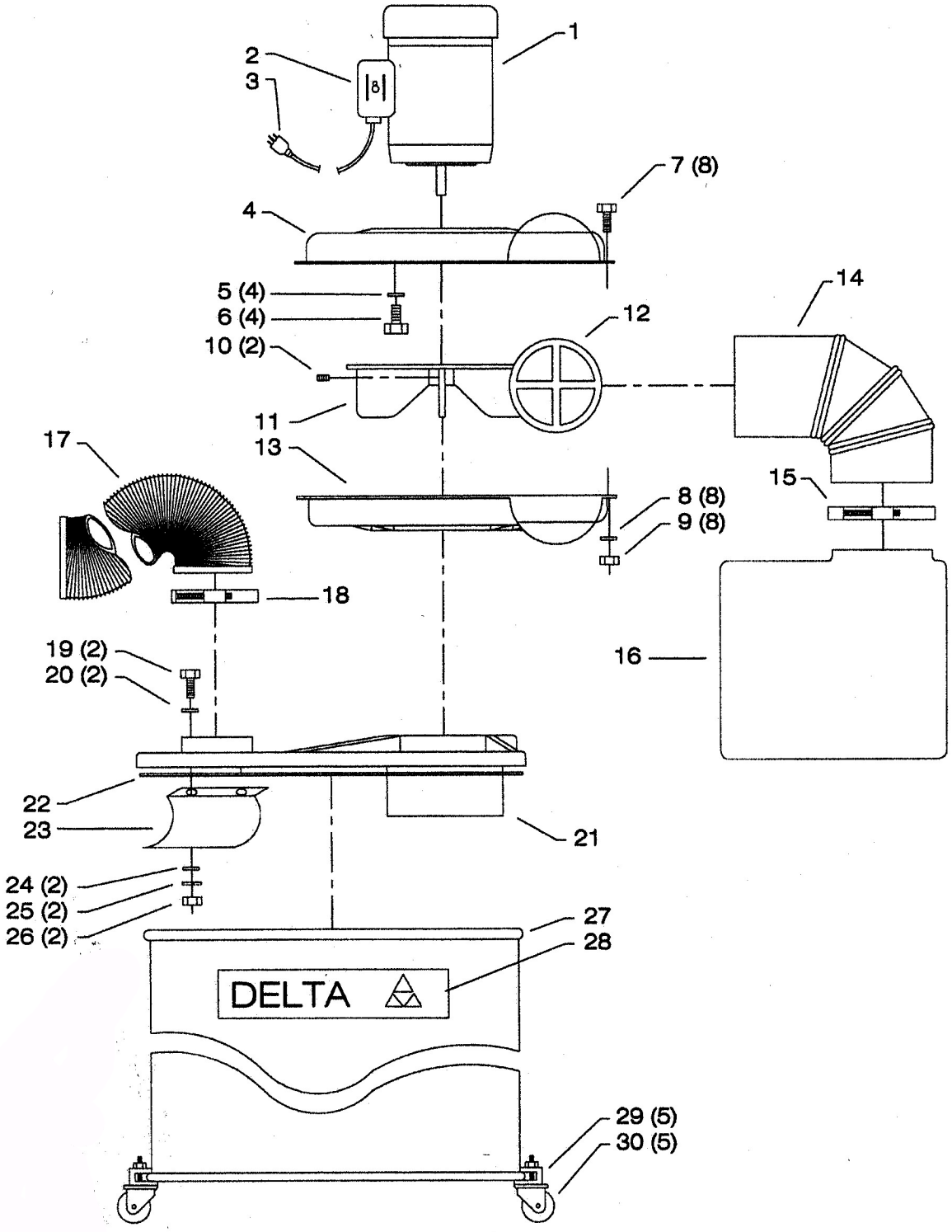
Revised 3-3-99