SERVICE PARTS LIST

BULLETIN NO. 54-46-2303

SPECIFY CATALOG NO. AND SERIAL NO. WHEN ORDERING PARTS		REVISED BULLETIN 54-46-2302	DATE May '84
LARGE BASE ELECTROMAG DRILL STAND		WIRING INSTRUCTION * SEE NOTE	
CATALOG NO. 4221	STARTING SERIAL NO. 499-7780		
CANADIAN TOOLS → CAT. NO. 4221-6	START SER. NO. 499-7780	BILINGUAL LABEL - SEE NAMEPLATE	

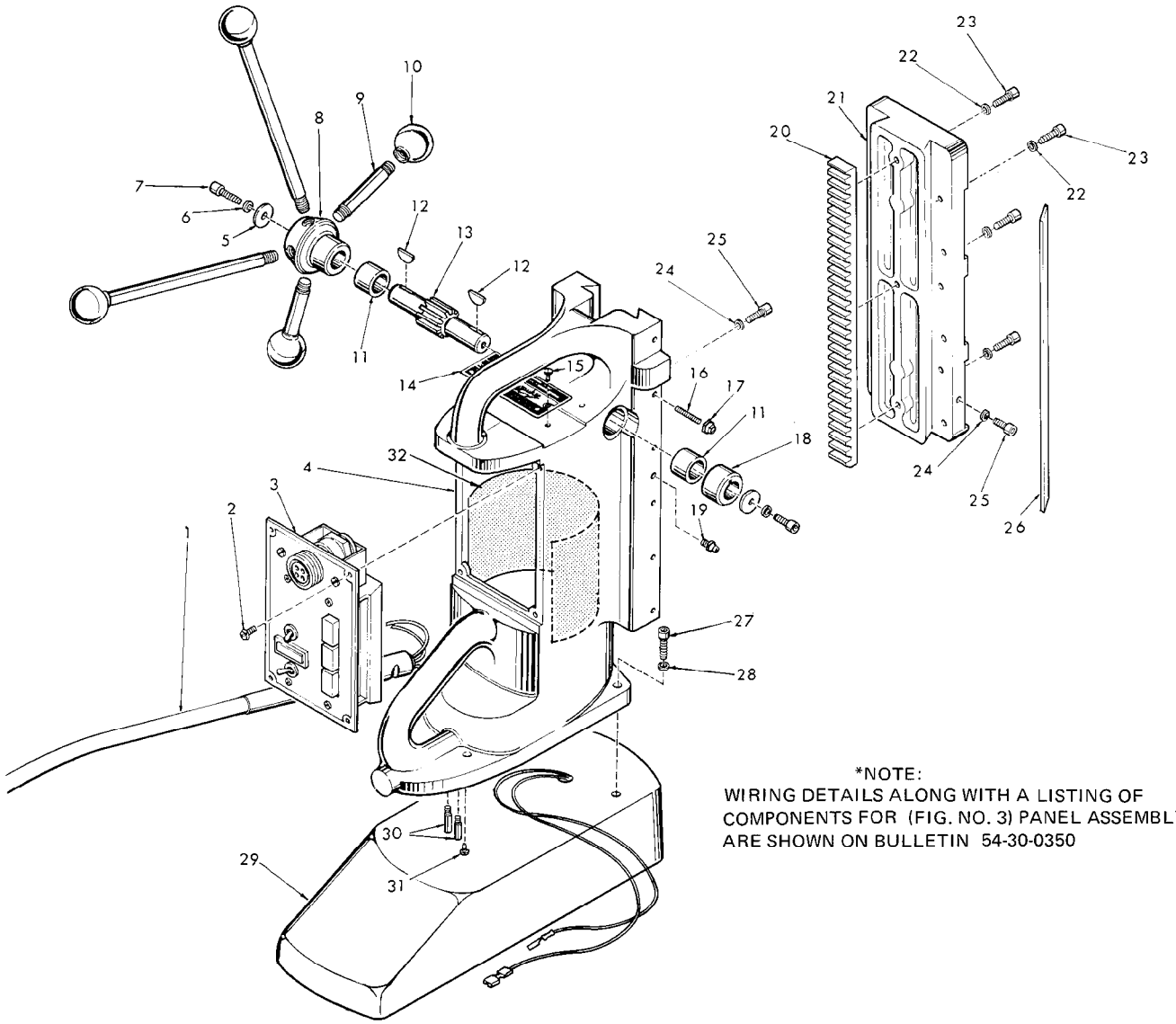

*NOTE:
WIRING DETAILS ALONG WITH A LISTING OF COMPONENTS FOR (FIG. NO. 3) PANEL ASSEMBLY ARE SHOWN ON BULLETIN 54-30-0350

FIG.	PART NO.	DESCRIPTION OF PART	NO. REQ.
1	22-64-0075	Cord Set	(1)
2	06-81-5400	8-32x5/16 Binder Sems	(4)
★3	23-35-0300	Panel Assembly (See Note)	(1)
4	28-50-7820	Support Housing	(1)
5	45-88-5247	Hub Washer	(2)
6	06-97-4050	Lock Washer	(2)
7	06-75-3005	1/4-20x5/8 Socket Hd. Screw	(2)
8	43-78-0240	Handle Hub	(1)
9	43-62-0055	Handle	(4)
10	43-98-0050	Plastic Knob	(4)
11	42-40-0445	Bushing	(2)
12	06-42-2300	Woodruff Key	(2)
13	32-60-2050	Pinion Gear	(1)
14	12-99-0060	Nameplate	(1)
	12-99-0326	Nameplate Blank (Canada)	
15	06-85-0200	6x1/4 Rd. Hd. Type Z Screw	(4)
16	06-83-2520	10-32x1 Hdls. Socket Screw	(6)
17	06-57-4050	Lock Nut	(6)

FIG.	PART NO.	DESCRIPTION OF PART	NO. REQ.
18	43-78-0230	Hub	(1)
19	43-33-0150	Grease Fitting	(2)
20	44-80-0070	Rack	(1)
21	30-84-0190	Slide	(1)
22	06-97-4050	Lock Washer	(7)
23	06-75-3050	1/4-20x3/4 Socket Hd. Screw	(7)
24	06-97-4050	Lock Washer	(2)
25	06-75-2900	1/4-20x3/8 Socket Hd. Screw	(2)
26	43-48-0100	Gib	(1)
27	06-75-3250	1/4-20x1/2 Socket Hd. Screw	(4)
28	06-97-4050	Lock Washer	(4)
29	42-20-0410	Magnetic Base Assembly	(1)
30	45-04-0100	Cord Retaining Screw	(2)
31	06-81-8800	8-32x1/4 Ground Screw	(1)
32	23-16-0760	Panel Insulator	(1)
➤ 33	12-98-7035	Instruction Plate (Not Shown) Located Next To Nameplate	(1)

➤ Omit for Canadian Tools

MILWAUKEE ELECTRIC TOOL CORPORATION
13135 W. LISBON RD., BROOKFIELD, WIS. 53005