SERVICE PARTS LIST

BULLETIN NO.
54-16-4050

SPECIFY CATALOG NO. AND SERIAL NO. WHEN ORDERING PARTS		REVISED BULLETIN	DATE
TWO SPEED DYMODRILL			March'88
CATALOG NO. 4095	STARTING SERIAL NO. 741-1001	WIRING INSTRUCTION	58-01-0930

EXAMPLE:
00 0 Component Parts (Small #) Are Included When Ordering The Assembly (Large #).

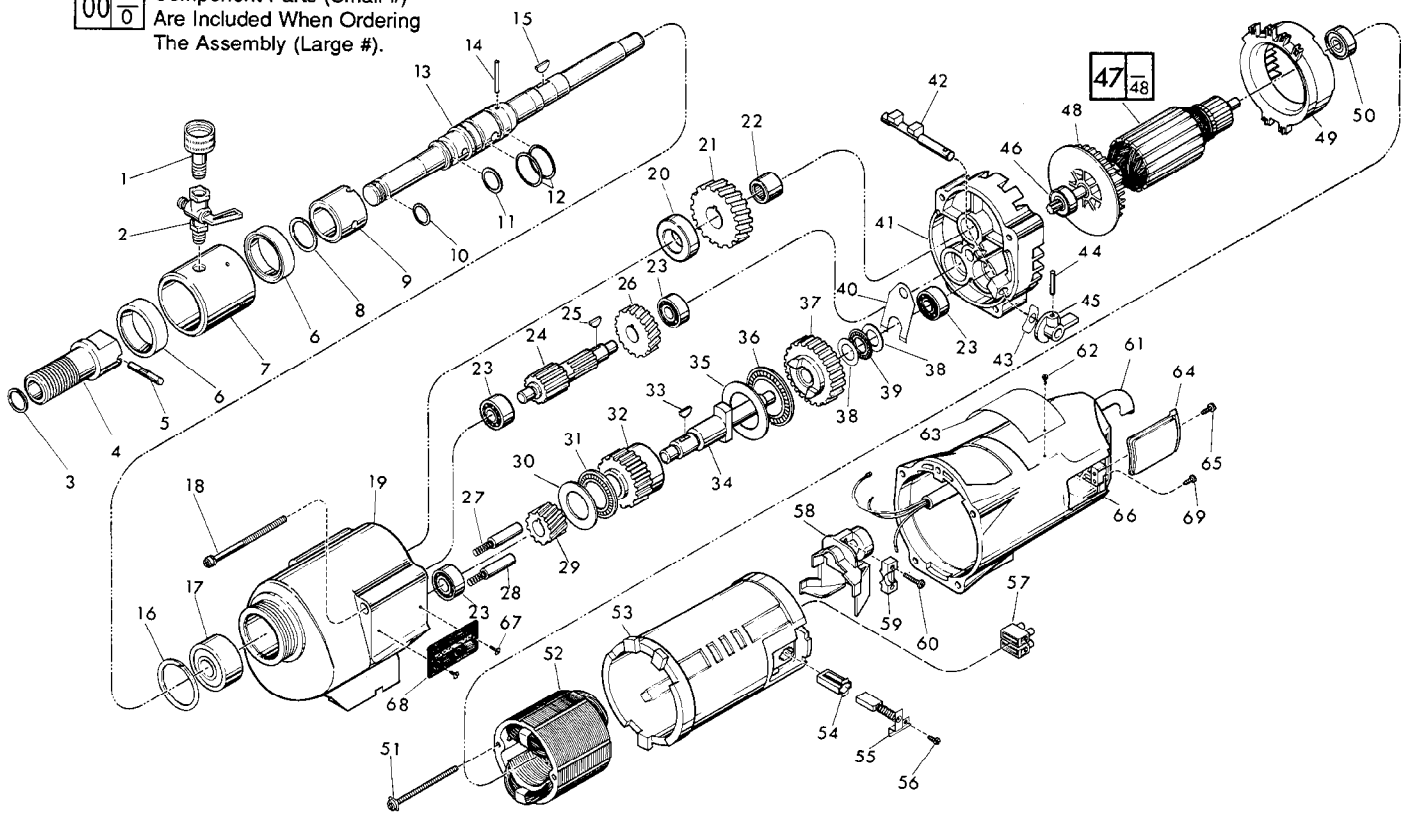

FIG.	PART NO.	DESCRIPTION OF PART	NO. REQ.
1	42-04-0600	Water Hose Adapter	(1)
2	45-80-0060	Shut Off Valve	(1)
3	34-60-1800	Retaining Ring	(1)
4	45-22-0050	Spindle Sleeve	(1)
5	44-60-0031	Shear Pin	(1)
6	45-06-0050	Trostel Seal	(2)
7	43-76-0051	Water Swivel Housing (With 06-83-2430 Scr.)	(1)
8	34-60-2115	Retaining Ring	(1)
9	42-40-0830	Spindle Bushing	(1)
10	34-40-1100	O-Ring	(1)
11	34-40-1200	O-Ring	(1)
12	34-40-1350	O-Ring	(2)
13	38-50-4555	Spindle	(1)
14	06-65-1530	1/8 X 1/2" Roll Pin	(1)
15	06-42-2400	Woodruff Key	(1)
16	34-80-3800	Retaining Ring	(1)
17	02-20-2515	Ball Bearing	(1)
18	06-82-9202	1/4 - 20x4-1/4" Taptite Torx Screw	(4)
19	28-14-1870	Gear Case Assy.(Inc. 06-65-1535 Pin)	(1)
20	45-36-1245	Spindle Spacer	(1)
21	32-75-2481	Spindle Gear	(1)
22	02-50-4830	Needle Bearing	(1)
23	02-04-1205	Ball Bearing	(4)
24	36-66-3751	Pinion Shaft Assy.	(1)
25	06-42-1600	Woodruff Key	(1)
26	32-40-1581	Intermediate Gear	(1)
27	40-50-6300	Shifting Spring	(2)
28	44-70-0100	Shifting Plunger	(2)
29	32-60-2011	Pinion Gear	(1)
30	45-88-0520	Thrust Bearing Washer	(1)
31	02-80-1800	Thrust Bearing	(1)
32	32-10-0061	Clutch Gear Assembly	(1)
33	06-42-2000	Woodruff Key	(1)
34	36-14-0061	Clutch Shaft	(1)
35	45-88-0530	Thrust Bearing Washer	(1)
36	02-80-5000	Thrust Bearing	(1)
37	32-10-0051	Clutch Gear Assembly	(1)
38	45-88-0510	Thrust Bearing Washer	(2)
39	02-80-1200	Thrust Bearing	(1)
40	45-98-0090	Shifting Yoke	(1)

FIG.	PART NO.	DESCRIPTION OF PART	NO. REQ.
41	14-13-0220	Diaphragm Assy.(Inc. 06-65-1155 Pin)	(1)
42	30-15-0272	Shift Cam	(1)
43	45-06-0350	Gear Case Seal	(1)
44	06-65-0840	1/8 x 3/4" Groove Pin	(1)
45	28-60-0056	Shifting Knob	(1)
46	02-04-1229	Ball Bearing	(1)
47	16-70-0330	120 V Armature	(1)
48	22-84-0790	Fan	(1)
49	42-14-0291	Baffle	(1)
50	02-04-1041	Ball Bearing	(1)
51	06-82-9152	10-24x2-3/4" Torx Sem. Screw	(2)
52	18-70-0300	120 V. Field	(1)
53	23-16-1410	Motor Insulator	(1)
54	22-20-0680	Brush Tube	(2)
55	22-18-0702	Carbon Brush Assembly	(2)
56	06-82-8835	8-32x5/16" Pan Torx Sem. Screw	(2)
57	22-56-0470	Terminal Block	(1)
58	22-38-0140	Wire Trap	(1)
59	31-17-0200	Cord Clamp	(1)
60	06-82-7326	8-16x1" Pan Hd. Plastite Torx Screw	(2)
61	22-64-4460	Cord Set (Inc. 23-35-0120 Plug)	(1)
62	06-85-0200	Nameplate Screw	(2)
63	12-15-7020	Nameplate	(1)
64	22-32-0350	Brush Cover	(2)
65	06-82-7252	8-32 x 3/8" Pan Slot Taptite Screw	(2)
66	28-50-6360	Motor Housing	(1)
67	06-82-5266	4-40x1/4" Pan Hd. Taptite Screw	(2)
68	12-98-2100	Instruction Plate	(1)
69	06-95-5200	8-32 x 5/16" Slot Hex Hd. Screw	(1)
	49-96-4700	1-3/8" Open End Wrench	(1)
	45-88-0800	Water Hose Washer(For Fig. No. 1)	(1)

FOR MOUNTING DRILL MOTOR USE:

06-75-3090	1/4-20 x 7/8" Socket Hd. Screw	(4)
06-97-4050	1/4" Split Ring Lock Washer	(4)

FIG.	LUBRICATION
19	18 Oz. Type "E" Grease, No. 49-08-4121.

MILWAUKEE ELECTRIC TOOL CORPORATION
13135 W. LISBON RD., BROOKFIELD, WI 53005