SERVICE PARTS LIST

BULLETIN NO. 54-47-0210

SPECIFY CATALOG NO. AND SERIAL NO. WHEN ORDERING PARTS			REVISED BULLETIN	DATE Nov. 2013
18 Volt PEX Expander			WIRING INSTRUCTION **SEE PAGE 2**	
CATALOG NO.	**2632-20**	STARTING SERIAL NO. **C67A**		

EXAMPLE: 00 — 0 Component Parts (Small #) Are Included When Ordering The Assembly (Large #).

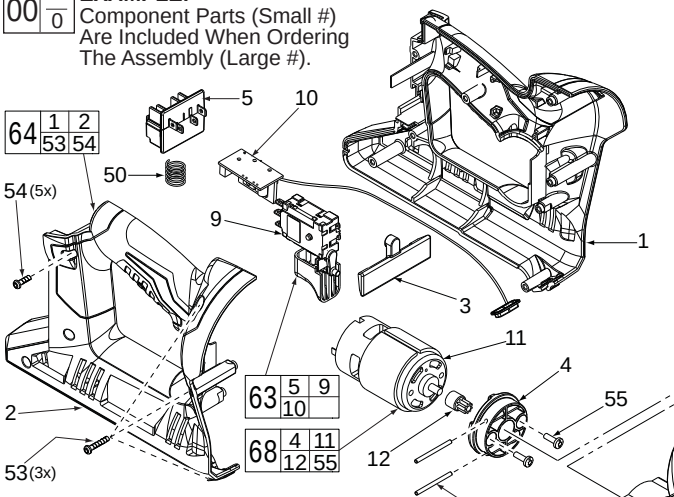

FIG.	PART NO.	DESCRIPTION OF PART	NO. REQ.
50	40-50-1090	Terminal Block Spring	(1)
51	06-82-5346	8-32 x .75 Pan Hd. Tapt. T-20 Screw	(2)
52	06-82-5362	8-32 x 1" Pan Hd. Tapt. T-20 Screw	(4)
53	05-88-1710	M3.5 x 22mm Pan Hd. T-10 Screw	(3)
54	06-82-2025	M3.5 x 16mm Pan Hd. T-10 Screw	(5)
55	----------	M4 x 8mm Pan Hd. Screw	(2)
59	12-20-2632	Service Nameplate	(1)
63	23-66-2935	Switch Assembly	(1)
64	31-44-3200	Handle Assembly	(1)
65	14-30-1100	Gearcase	(1)
66	14-29-0550	Cam Gear Assembly	(1)

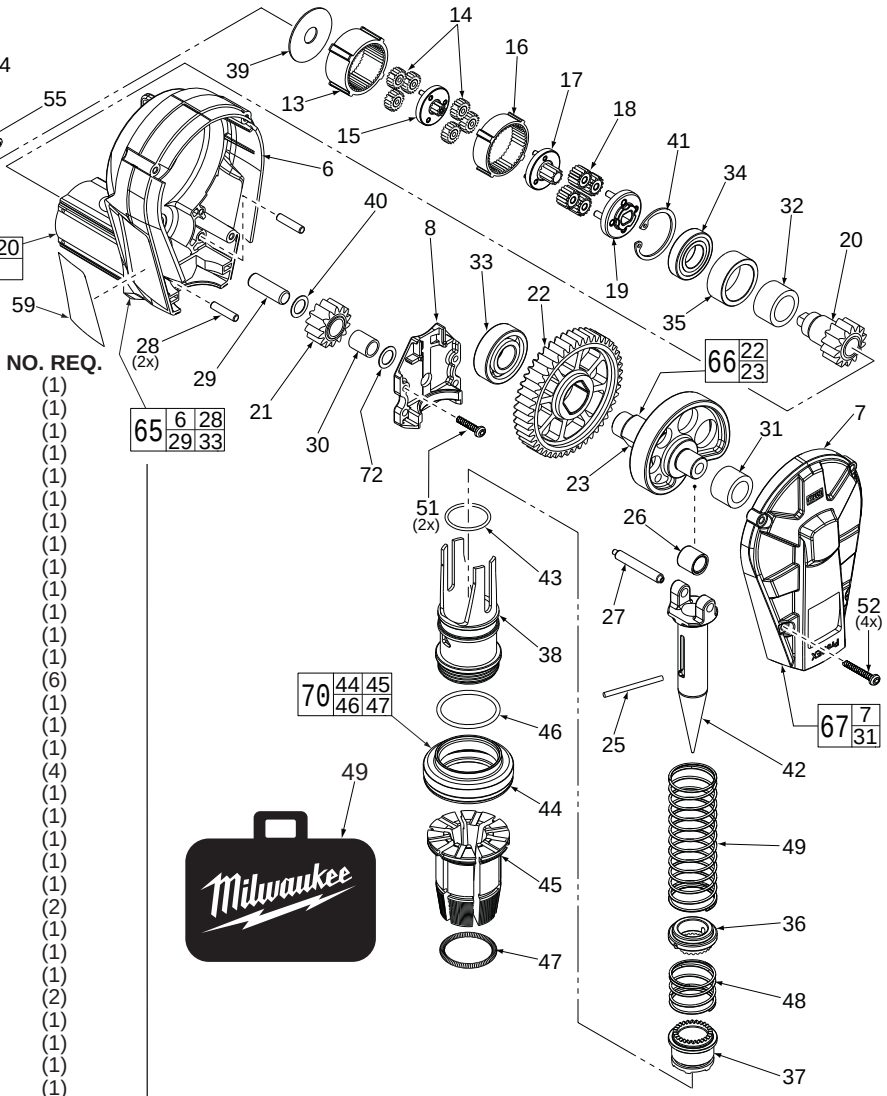

FIG.	PART NO.	DESCRIPTION OF PART	NO. REQ.
1	----------	Handle Halve - Left	(1)
2	----------	Handle Halve - Right	(1)
3	31-76-0450	Lockout Shuttle	(1)
4	----------	Motor Mount Bracket	(1)
5	22-56-1350	Terminal Block	(1)
6	----------	Gearcase Support	(1)
7	----------	Gearcase Cover	(1)
8	28-28-1010	Diaphragm	(1)
9	----------	Switch	(1)
10	----------	PCBA	(1)
11	----------	Motor	(1)
12	----------	Motor Pinion	(1)
13	----------	1st and 2nd Ring Gear	(1)
14	----------	1st and 2nd Planet Gear	(6)
15	----------	1st Carrier and 2nd Sun Gear	(1)
16	----------	3rd Ring Gear	(1)
17	----------	2nd Carrier and 3rd Sun Gear	(1)
18	----------	3rd Planet Gear	(4)
19	----------	3rd Carrier	(1)
20	----------	4th Pinion	(1)
21	32-75-3550	Idle Gear	(1)
22	----------	4th Drive Gear	(1)
23	----------	Cam	(1)
24	44-60-1970	Motor Mount Pin	(2)
25	44-60-1580	Shuttle Pin	(1)
26	44-96-0260	Roller	(1)
27	44-66-2180	Roller Pin	(1)
28	----------	Diaphragm Pin	(2)
29	----------	Idle Gear Pin	(1)
30	02-50-1240	Needle Bearing	(1)
31	----------	Needle Bearing	(1)
32	----------	Needle Bearing	(1)
33	02-04-0390	Ball Bearing	(1)
34	----------	Ball Bearing	(1)
35	----------	Spacer	(1)
36	31-76-0300	Drive Collar	(1)
37	42-76-0890	Rotating Collar	(1)
38	43-40-1000	Frame	(1)
39	----------	Washer	(1)
40	45-88-3090	Washer	(1)
41	----------	Retaining Ring	(1)
42	32-75-1590	Spindle	(1)
43	34-40-0490	O-Ring	(1)
44	----------	Ring	(1)
45	----------	Segment	(6)
46	----------	Big Spring for Head	(1)
47	----------	Small Spring for Head	(1)
48	40-50-1575	Collar Spring	(1)
49	40-50-1640	Spindle Returning Spring	(1)

FIG.	PART NO.	DESCRIPTION OF PART	NO. REQ.
67	14-38-0900	Gearcase Cover Assembly	(1)
68	23-30-0925	Motor Assembly	(1)
69	14-29-0625	Gearcase Assembly	(1)
70	49-16-2608	H1" Head Assembly	(1)
71	42-55-2600	Carrying Case, Optional	(1)
72	45-88-0688	Washer	(1)

FIG. NOTES:

4,68,69 Service replacement gearcase assembly (69) comes with a motor mount plate (4) that must be removed and discarded when servicing. A motor mount plate already exists on the motor assembly (68).

MILWAUKEE ELECTRIC TOOL CORPORATION
13135 W. Lisbon Road, Brookfield, WI 53005

Drwg. 5