SERVICE PARTS LIST

BULLETIN NO. 54-06-2180

SPECIFY CATALOG NO. AND SERIAL NO. WHEN ORDERING PARTS		REVISED BULLETIN	DATE Sept. 2024
REDLITHIUM® USB STICK LIGHT W/ MAGNET		WIRING INSTRUCTION	
CATALOG NO. 2128-20	**SERIAL NO. M59A**		

00 | 0 **EXAMPLE:** Component Parts (Small #) Are Included When Ordering The Assembly (Large #).

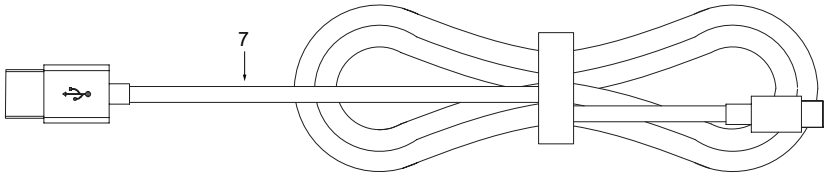

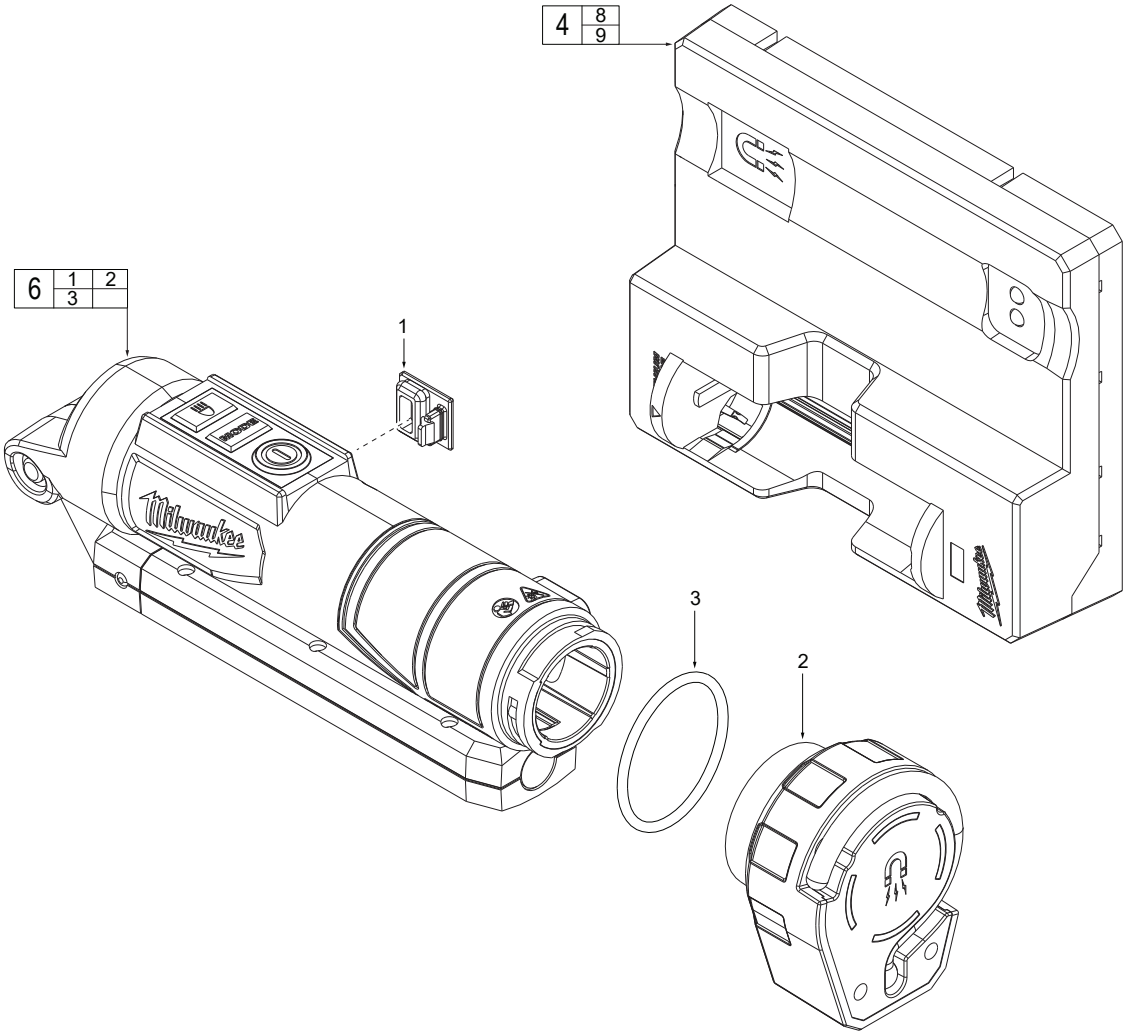

FIG.	PART NO.	DESCRIPTION OF PART	NO. REQ.
1	22-68-2128	USB Cover	(1)
2	31-12-0006	Battery Cap	(1)
3	34-40-2128	O-Ring for Battery Cap	(1)
4	48-59-2128	USB Stick Light Dock (Optional)	(1)
5	12-20-2128	Service Nameplate 2128-20 (Not Shown)	(1)
6	2128-20	USB Rechargeable Stick Light Bare Tool	(1)
7	42-44-1209	3ft. USB-C Cable (Optional)	(1)
8	10-20-4309	Warning Label for Dock (Not Shown)	(1)
9	12-20-0928	Service Nameplate for Dock (Not Shown)	(1)

FIG.	NOTES
5,8,9	A clean, dry surface is essential for proper performance for any adhesive system. The area intended for application of any adhesive label or nameplate must be prepared by cleaning with isopropyl alcohol. The solvent is to be applied with a clean, lint free applicator and the surface allowed to dry before applying the label or nameplate.

MILWAUKEE TOOL • www.milwaukeetool.com
13135 W. LISBON RD., BROOKFIELD, WI 53005

Drwg. 2