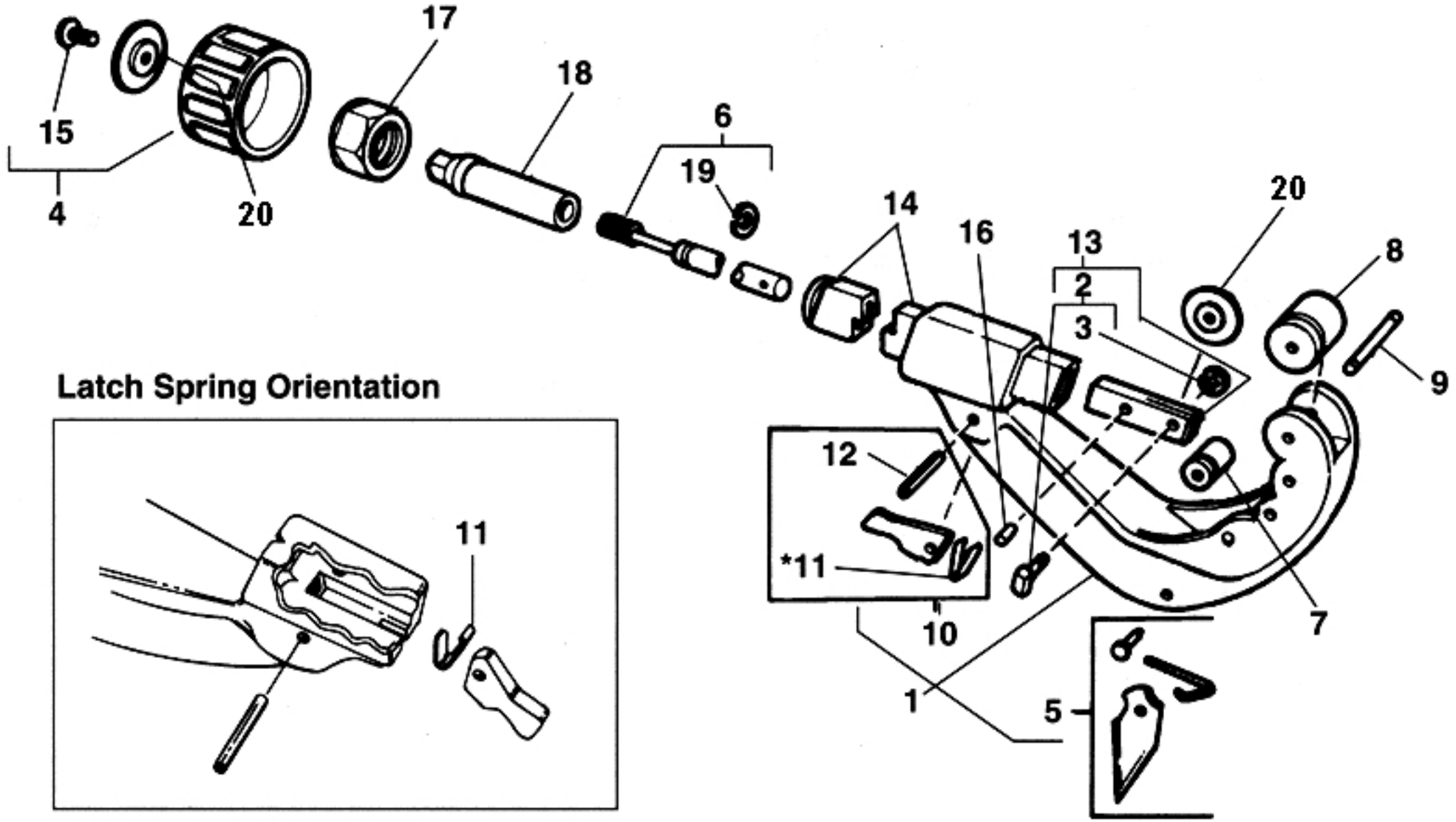

Latch Spring Orientation