3 601 H33 210
Stand ~~09-05~~
Issue 09-06-29

Fig./Abb. 1

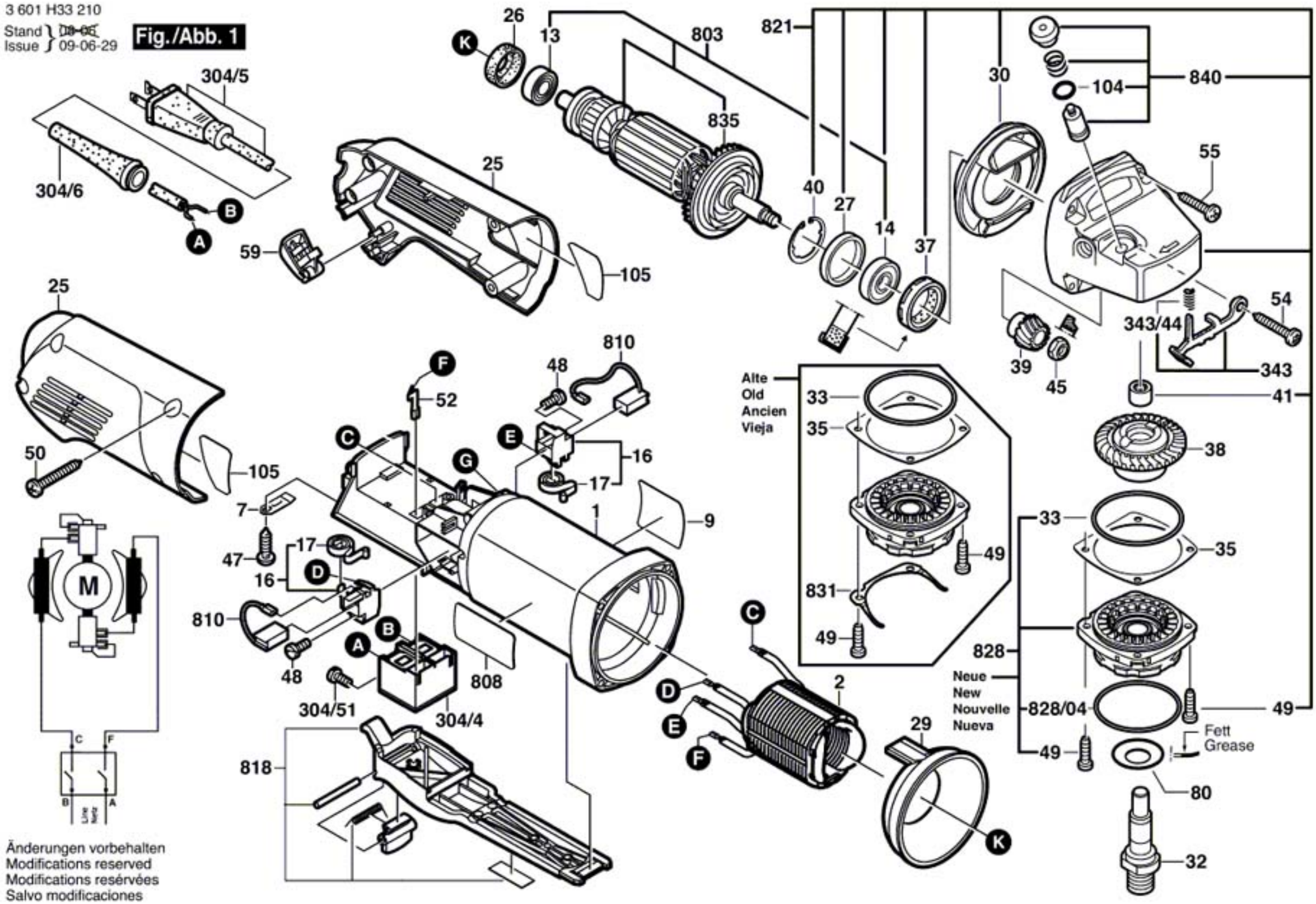

Änderungen vorbehalten
Modifications reserved
Modifications reservées
Salvo modificaciones

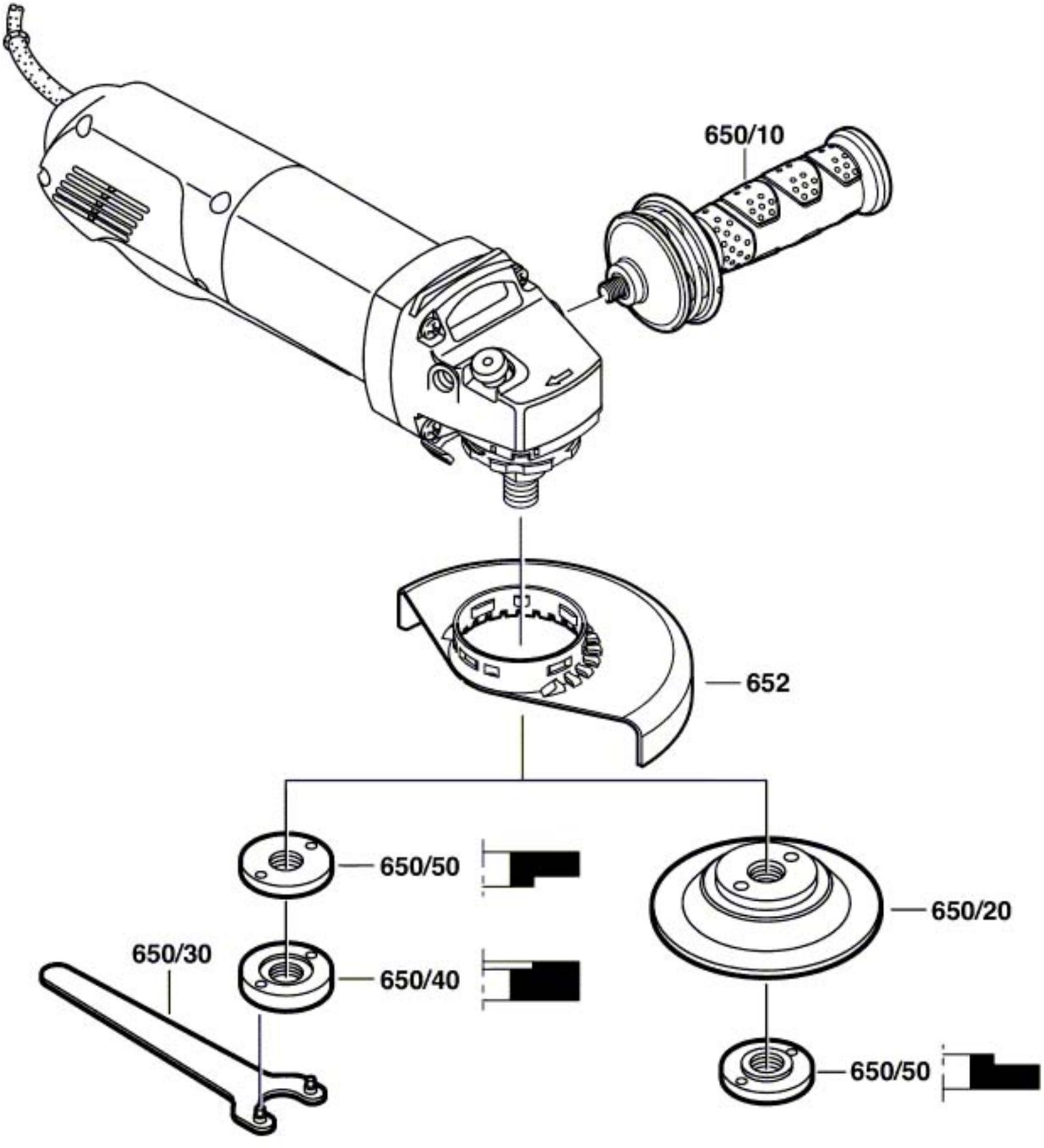
650/10
652
650/50
650/20
650/30
650/40
650/50